Wk8L1: Capacitors / Inductors & 1st Order Circuits

Giles Blaney, PhD

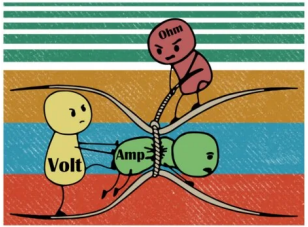

Tufts UNIVERSITY | School of Engineering

Mon. Oct. 20

Summary of Typical Op-Amp Circuits

Table 4-3: Summary of op-amp circuits.

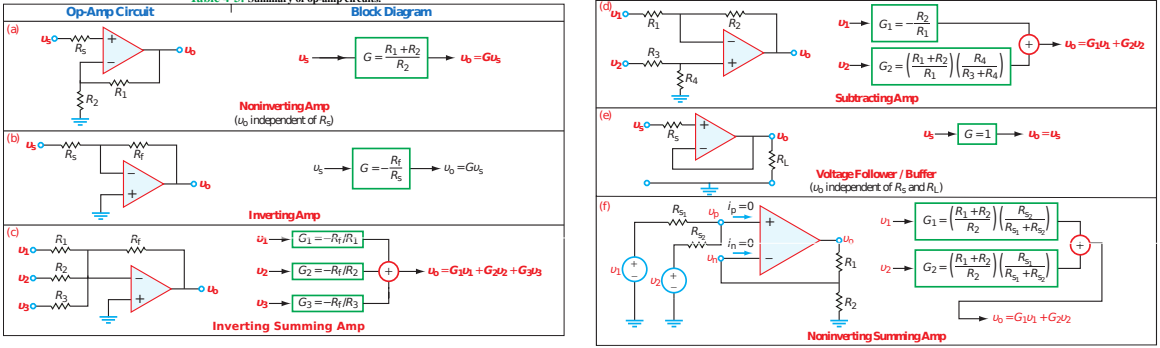

Capacitor / Inductor

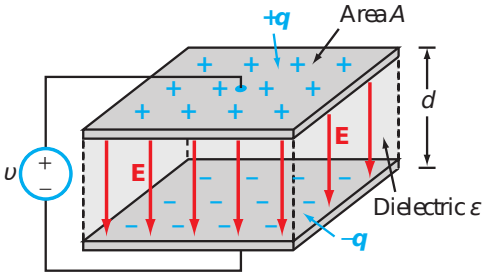

Figure 5-11: Parallel-plate capacitor with plates of area A, separated by a distance d, and f lled with an insulating dielectric material of permittivity ε.

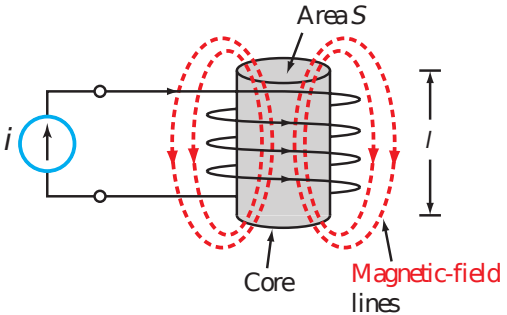

Figure 5-20: The inductance of a solenoid of length l and cross-sectional area S is $L = \mu N^2 S/l$, where N is the number of turns and μ is the magnetic permeability of the core material.

Capacitance / Inductance

Capacitance

$$C = \frac{q}{v}$$

Capacitance C, measured in farads (F), is defined as the amount of charge q that its positive-polarity plate holds, normalized to the applied voltage responsible for that charge accumulation.

See Equation 5.20

Inductance

$$L = \frac{\Lambda}{i}$$

Inductance L, measured in henry (H), is defined as the amount of magnetic flux linkage Λ that passes through the coil, normalized to the flowing current responsible for that magnetic field.

See Equation 5.51

See Equation 5.36, 5.41, 5.63, & 5.65

Adding Capacitance

$$C_{eq,--} = \left(\sum_{k=1}^{n} \frac{1}{C_k} \right)^{-1} \quad (1)$$

$$C_{eq,||} = \sum_{k=1}^{n} C_k \quad (2)$$

Adding Inductance

$$L_{eq,--} = \sum_{k=1}^{n} L_k \quad (3)$$

$$L_{eq,||} = \left(\sum_{k=1}^{n} \frac{1}{L_k} \right)^{-1} \quad (4)$$

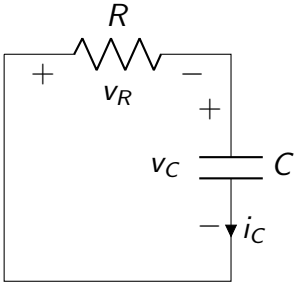
R
+
−
v_R
+
v_C
C
−
i_C

Step Response of Resistor Capacitor (RC) Circuit

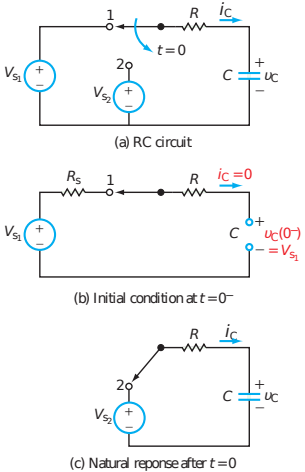

Figure 5-30: RC circuit switched from source V_{S_1} to source V_{S_2} at $t = 0$.

Series RC Circuit Solution

1: If switch action is at $t = 0$, analyze circuit at $t = 0^-$ to determine initial conditions $v_C(0^-)$ and $i_C(0^-)$. Use this information to determine $v_C(0)$ and $i_C(0)$, at t immediately after the switch action. Remember that the voltage across a capacitor cannot change instantaneously (between $t = 0^-$ and $t = 0$), but the current can.

2: Analyze the circuit to determine $v_C(\infty)$, the voltage across the capacitor long after the switch action.

3: Determine the time constant $\tau = RC$.

4: Incorporate the information obtained in the previous three steps in Eq. (5.96):

$$v_C(t) = \left\{v_C(\infty) + [v_C(0) - v_C(\infty)]e^{-t/\tau}\right\}u(t).$$

5: If the switch action is at $t = T_0$ instead of $t = 0$, replace 0 with T_0 and use Eq. (5.98):

$$v_C(t) = \left\{v_C(\infty) + [v_C(T_0) - v_C(\infty)] \cdot e^{-(t-T_0)/\tau}\right\} \cdot u(t - T_0).$$

Summary

Table 5-4: Basic properties of R, L, and C.

Property	R	L	C
i–υ relation	$i = \frac{\upsilon}{R}$	$i = \frac{1}{L}\int_{t_0}^{t} \upsilon\, dt' + i(t_0)$	$i = C\frac{d\upsilon}{dt}$
υ-i relation	$\upsilon = iR$	$\upsilon = L\frac{di}{dt}$	$\upsilon = \frac{1}{C}\int_{t_0}^{t} i\, dt' + \upsilon(t_0)$
p (power transfer in)	$p = i^2R$	$p = Li\frac{di}{dt}$	$p = C\upsilon\frac{d\upsilon}{dt}$
w (stored energy)	0	$w = \frac{1}{2}Li^2$	$w = \frac{1}{2}C\upsilon^2$
Series combination	$R_{eq} = R_1 + R_2$	$L_{eq} = L_1 + L_2$	$\frac{1}{C_{eq}} = \frac{1}{C_1} + \frac{1}{C_2}$
Parallel combination	$\frac{1}{R_{eq}} = \frac{1}{R_1} + \frac{1}{R_2}$	$\frac{1}{L_{eq}} = \frac{1}{R_1} + \frac{1}{R_2}$	$C_{eq} = C_1 + C_2$
dc behavior	no change	short circuit	open circuit
Can υ change instantaneously?	yes	yes	no
Can i change instantaneously?	yes	no	yes

Reminders

- Quiz III Wednesday
- HW 5 Due
- HW 6 Posted