251112 Transfer Functions

Impedance:

$$\boxed{Z(\omega) = \frac{\tilde{V}(\omega)}{\tilde{I}(\omega)}}$$

Voltage Gain:

$$\boxed{H(\omega) = \frac{\tilde{V}_{out}(\omega)}{\tilde{V}_{in}(\omega)}}$$

ex/

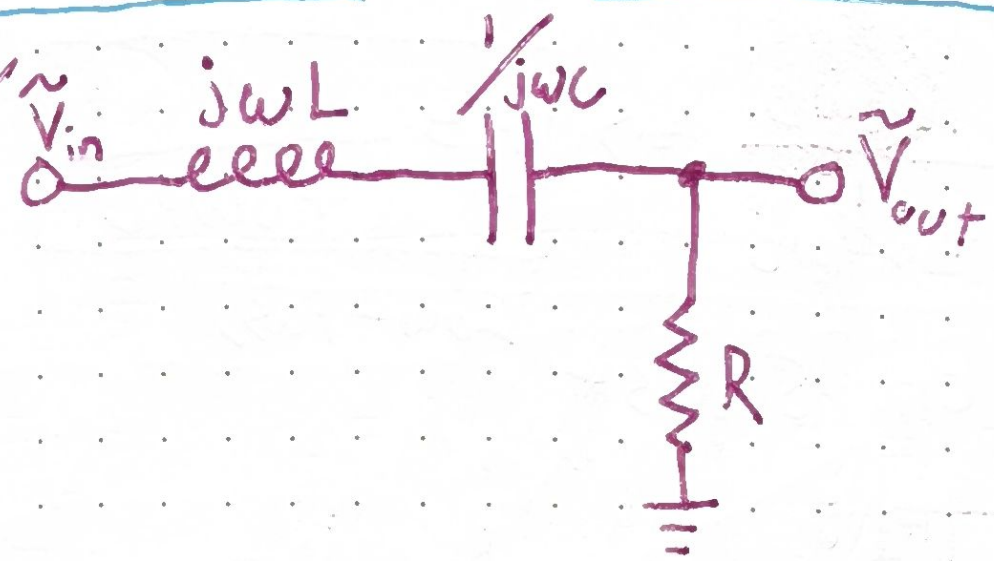

$$\Rightarrow \frac{\tilde{V}_{out}}{\tilde{V}_{in}} = \frac{R}{j\omega L - j/\omega C + R} = H(\omega)$$

$$\Rightarrow \boxed{H(\omega) = \frac{\omega RC}{\omega RC + j(\omega^2 LC - 1)}}$$ Band-Pass

See Plots on Slides

Notice:

$$|\tilde{V}_{out}| = |H||\tilde{V}_{in}|$$

and

$$\angle\tilde{V}_{out} = \angle\tilde{V}_{in} + \angle H$$

ex./

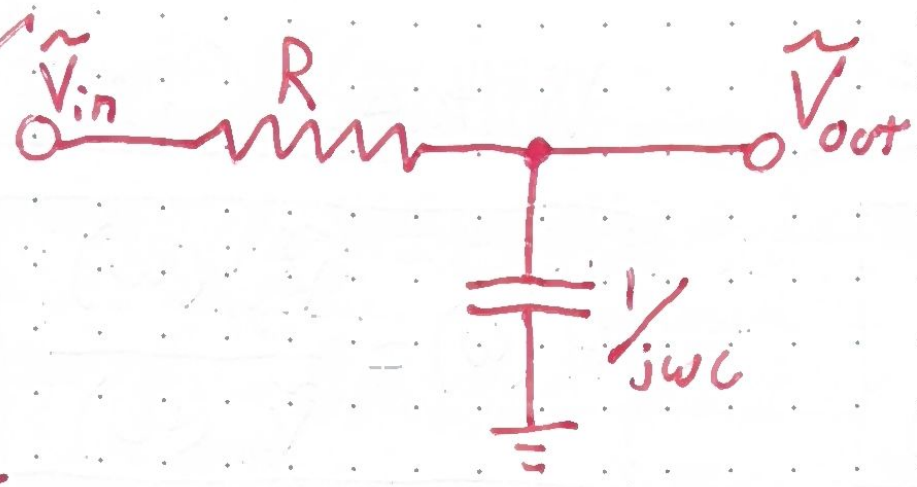

$$\Rightarrow \frac{\tilde{V}_{out}}{\tilde{V}_{in}} = \frac{1/j\omega C}{R + 1/j\omega C} \Rightarrow \boxed{H = \frac{1}{1 + j\omega RC}}$$

Low-Pass

See Plots on Slides

Consider $|H|$:

$$|H| = \frac{1}{|1 + j\omega RC|} = \frac{1}{\sqrt{1 + \omega^2 R^2 C^2}}$$

Notice that Max of $|H|$ is at $\omega = 0$

and $\max(|H(\omega)|) = M_0 = 1$

Cutoff Frequency (Half-Power Freq.):

Recall $P = IV = I^2 R = V^2/R$

$\Rightarrow P \propto |H|^2$

Let's find ω when it transfers half power (i.e., ω_c)

$$\boxed{|H(\omega_c)| = M_0/\sqrt{2}}$$

ex. Con't/

$\Rightarrow |H(\omega_c)$

$\Rightarrow 1 + \omega_c^2 R$

$\therefore \boxed{\omega_c}$

The dB S

Consider

then $\boxed{}$

But Reca

$\Rightarrow 10$

$\therefore \boxed{}$

$\tilde{V}_{out}$

$1/j\omega C$

$$\boxed{H = \frac{1}{1+j\omega RC}}$$

Low-Pass

$$\frac{1}{\omega^2 R^2 C^2}$$

$|H|$ is at $\omega = 0$

$= M_0 = 1$

(Half-power Freq.):

V^2/R

then it transfers

$\omega_c)$

$\boxed{\ \ 2}$

ex. Con't

$$\Rightarrow |H(\omega_c)| = \frac{M_0}{\sqrt{2}} \Rightarrow \frac{1}{\sqrt{1+\omega_c^2 R^2 C^2}} = \frac{1}{\sqrt{2}}$$

$$\Rightarrow 1+\omega_c^2 R^2 C^2 = 2 \Rightarrow \omega_c^2 R^2 C^2 = 1$$

$$\therefore \boxed{\omega_c = \frac{1}{RC}}$$

The dB scale:

Consider the Power gain: $G = P/P_0$

then $\boxed{G[dB] = 10 \log_{10}(G) = 10 \log_{10}(P/P_0)}$

Notice the 10

But Recall that $P = V^2/R$

$$\Rightarrow 10 \log_{10}(P/P_0) = 10 \log_{10}(V^2/V_0^2)$$

$$\therefore \boxed{G[dB] = 20 \log_{10}(V/V_0)}$$

Notice the 20

What is 1/2 Power in dB?

$$\boxed{10 \log_{10}(1/2) = -3.01 \approx -3\,dB}$$

Notice ω_c has a amplitude 3 dB less than M_0 in the Plots

Combining Transfer Functions:

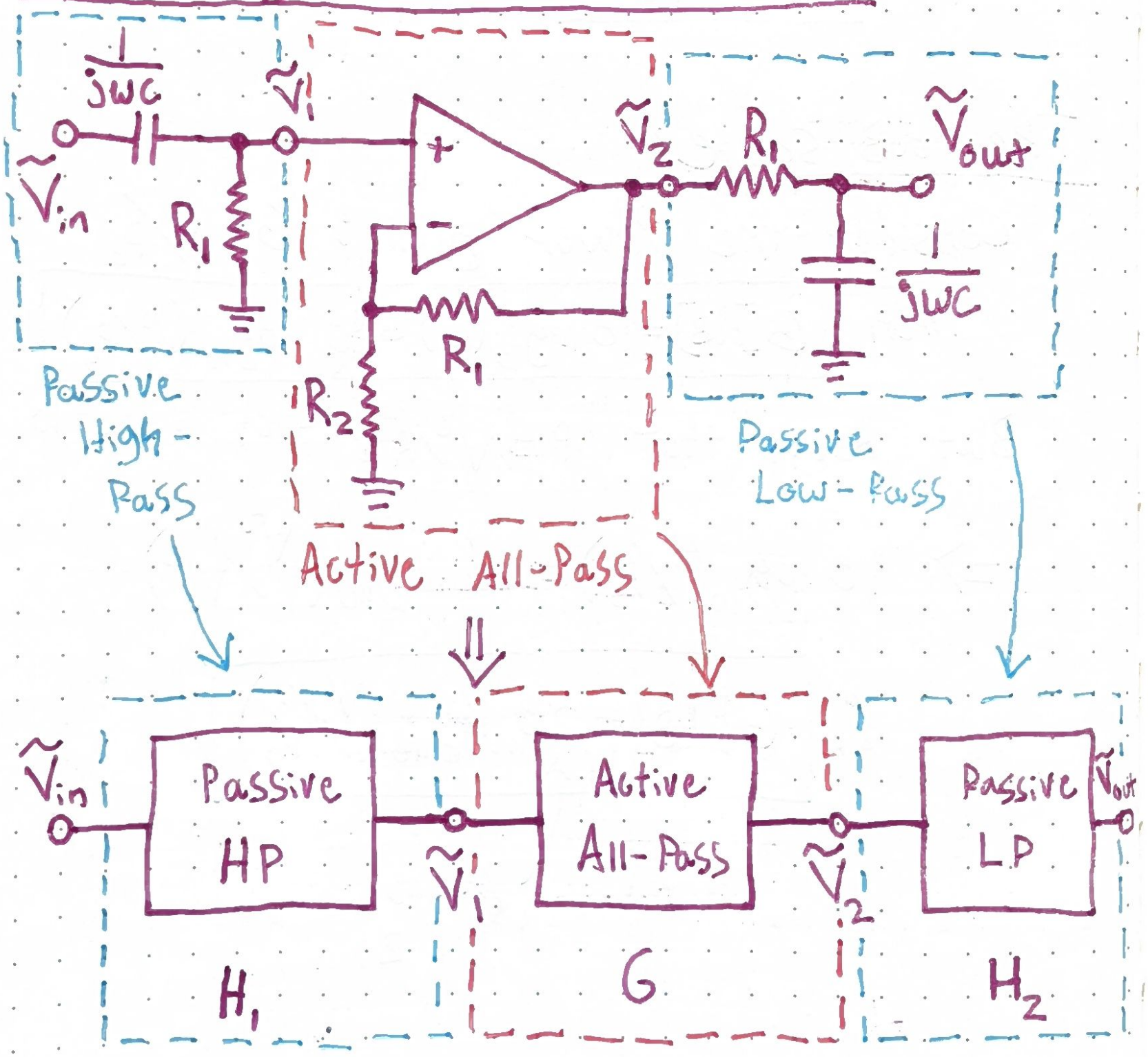

$\tilde{V}_1 = H_1 \tilde{V}_{in}$

$\Rightarrow \tilde{V}_{out} =$

$\therefore \frac{\tilde{V}_{out}}{\tilde{V}_{in}}$

We Know

$H_2 = \frac{}{1+j}$

We Know

$G = \frac{R_1 +}{R_2}$

We can fin

$\tilde{V}_1 = \frac{R_1}{R_1 + \frac{}{j}}$

This need

$\therefore H_{sys} = ($

*See

er in dB?

$$\boxed{01 \approx -3\,dB}$$

a amplitude

M_0 in the Plots

Functions:

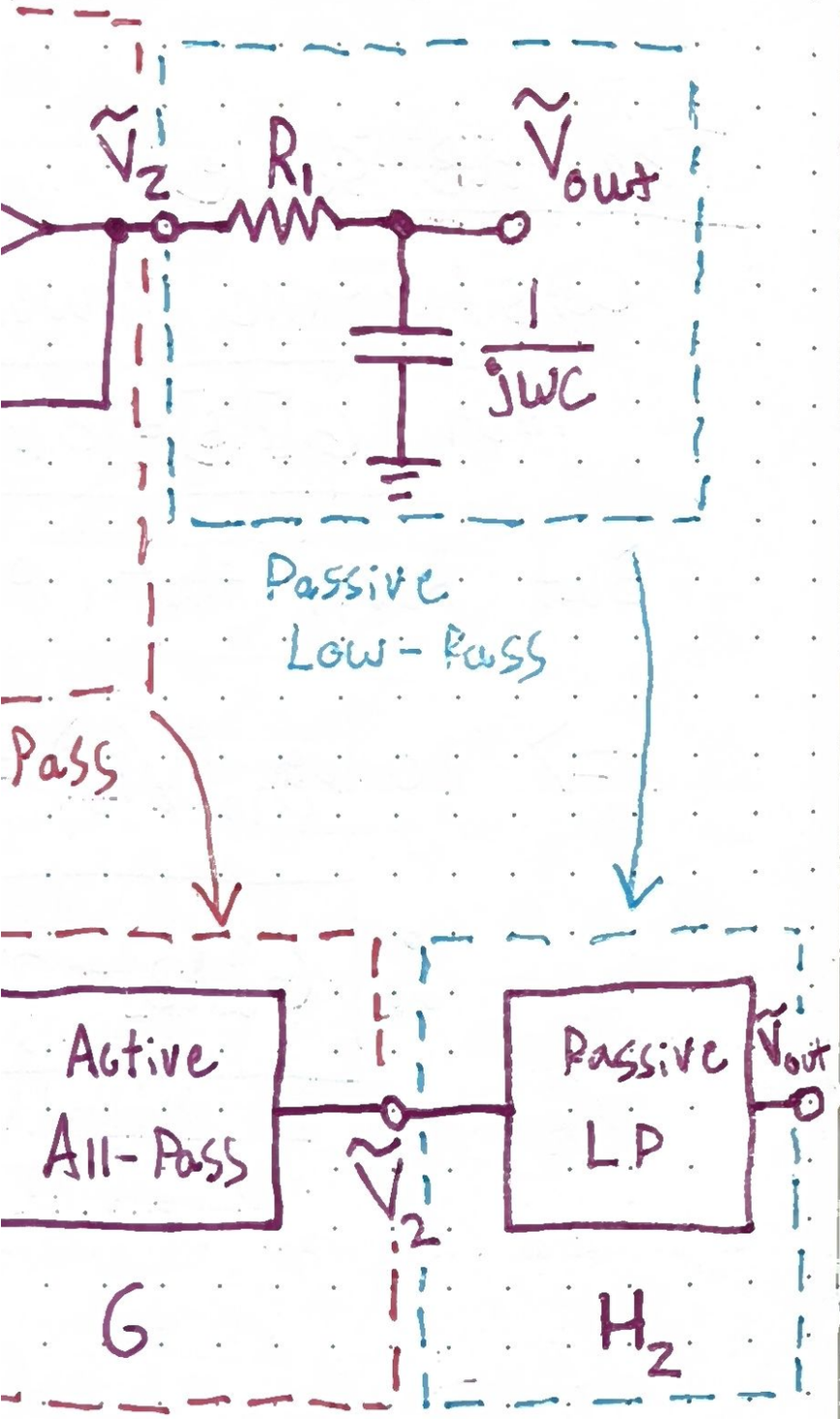

$$\tilde{V}_1 = H_1 \tilde{V}_{in} \qquad \tilde{V}_2 = G\tilde{V}_1 \qquad \tilde{V}_{out} = H_2 \tilde{V}_2$$

$$\Rightarrow \tilde{V}_{out} = H_2 G H_1 \tilde{V}_{in}$$

$$\boxed{\therefore \frac{\tilde{V}_{out}}{\tilde{V}_{in}} = H_1 G H_2 = H_{sys}}$$

we Know H_2 from Previous example:

$$\boxed{H_2 = \frac{1}{1+j\omega R_1 C}}$$

We Know G from NON-inverting OP-amp:

$$\boxed{G = \frac{R_1 + R_2}{R_2}}$$

We can find H_1 w/ Volt division:

$$\tilde{V}_1 = \frac{R_1}{R_1 + \frac{1}{j\omega C}} \tilde{V}_{in} = \boxed{\frac{j\omega R_1 C}{1+j\omega R_1 C}} \tilde{V}_{in}$$

This is H_1

This needs $\tilde{I}_p = 0$ to use Volt division.

$$\boxed{\therefore H_{sys} = \left(\frac{j\omega R_1 C}{1+j\omega R_1 C}\right)\left(\frac{R_1+R_2}{R_2}\right)\left(\frac{1}{1+j\omega R_1 C}\right)}$$

See Plots on Slides

Active Band-Pass