250924 OP-amps

## Ideal OP-Amp:

→ Open-loop gain: $A \to \infty$
→ Input Resistance: $R_i \to \infty$
→ output Resistance: $R_o \to 0$

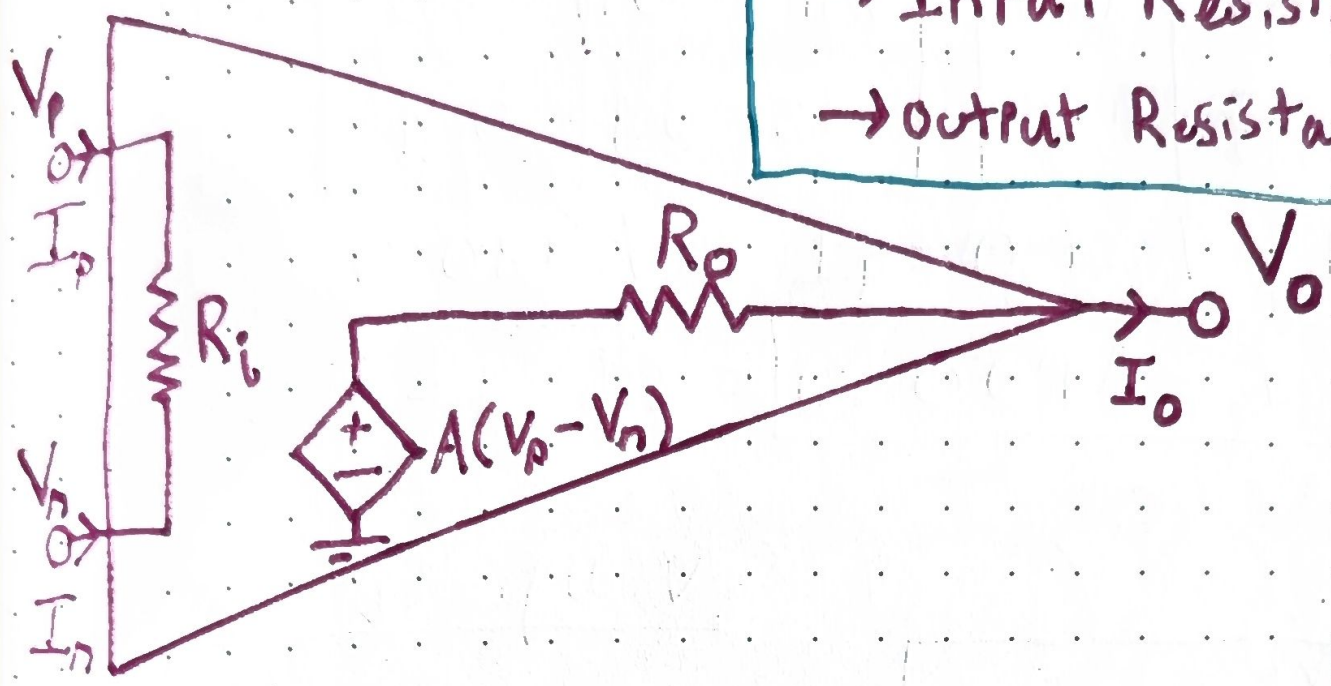


- From KCL: $I_p + I_n = 0 \Rightarrow I_p = -I_n$
- From $R_i \to \infty$ : $I_p = 0$ (also $I_n = 0$)

$\therefore$ $\boxed{\text{For Ideal } I_p = I_n = 0}$

- From $R_o \to 0$ : Voltage across $R_o$ is zero

$\Rightarrow A(V_p - V_n) = V_o$

- From $A \to \infty$ : $\Rightarrow V_p - V_n = V_o/A$

$$\lim_{A \to \infty} \frac{V_o}{A} = 0 \Rightarrow \boxed{V_p = V_n}$$

→ The op-amp will output whatever is needed from $V_o$ to make $V_p$ equal $V_n$ (w negative feedback)

## Non-inverting Amp:

* Feedback must go to the inverting input.

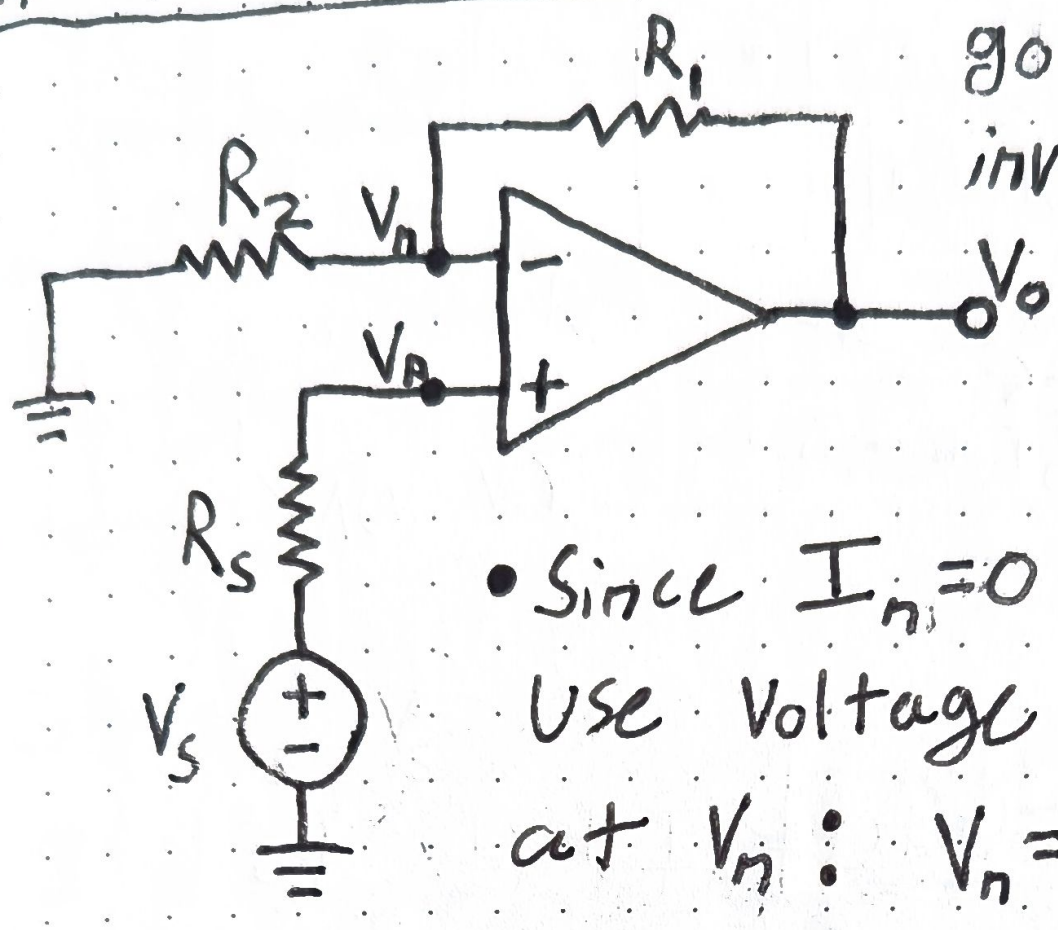


- Since $I_n = 0$ we can use voltage division at $V_n$: $V_n = \frac{R_2}{R_1 + R_2} V_o$

- Apply $V_p = V_n$: $V_n = V_p = \frac{R_2}{R_1 + R_2} V_o$

- Since $I_p = 0$ there is no voltage change across $R_s$: $V_s = V_p$

$$\Rightarrow V_s = \frac{R_2}{R_1 + R_2} V_o \quad \therefore \boxed{\frac{V_o}{V_s} = G = \frac{R_1 + R_2}{R_2}}$$

* Block Diagram:

$$\boxed{V_s \longrightarrow \boxed{G = \frac{R_1 + R_2}{R_2}} \longrightarrow V_o}$$