251022 Resistor Capacitor op-amps

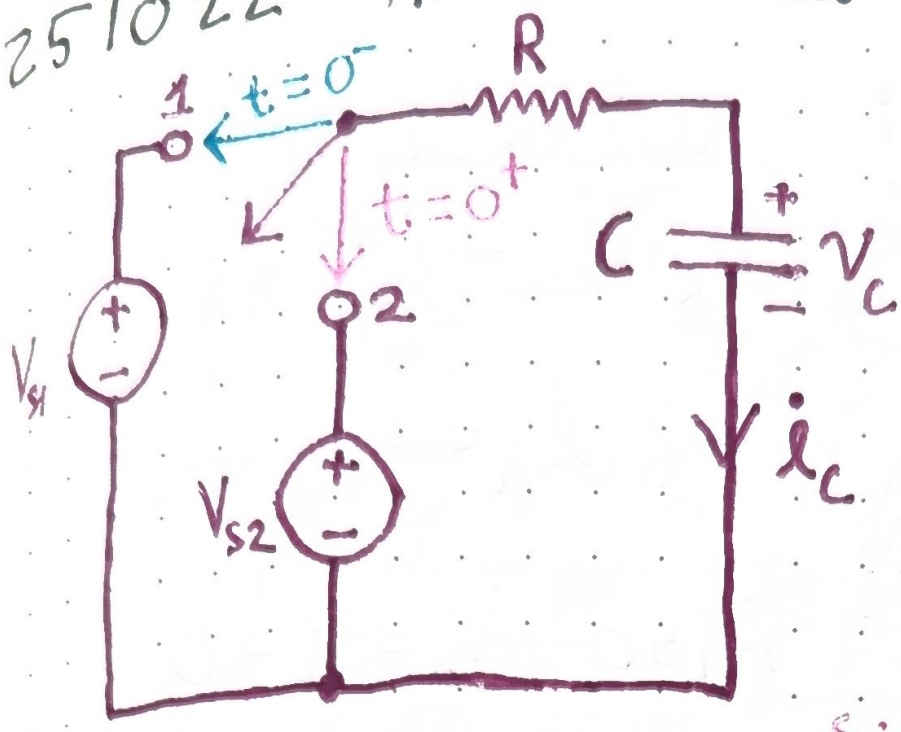

At 0^-:

* $v_c(0^-) = V_{s1}$
* $i_c(0^-) = 0$

At 0^+:

* $v_c(0^+) = V_{s1}$

Since V_c can't change instantly.

* $i_c(0^+) = (V_{s2} - V_{s1})/R$

From Ohm's law

At $t = \infty$:

* $v_c(\infty) = V_{s2}$
* $i_c(\infty) = 0$

$\Rightarrow$ We know $\boxed{v_c(0) = V_{s1}}$ and $\boxed{v_c(\infty) = V_{s2}}$

$\Rightarrow$ i_c flows through R and C...

thus $\boxed{\tau = RC}$

Use $v_c(t) = \left(v_c(\infty) + [v_c(0) - v_c(\infty)]e^{-t/\tau}\right)u(t)$

$$\boxed{\therefore\ v_c(t) = \left(V_{s2} + [V_{s1} - V_{s2}]e^{-t/(RC)}\right)u(t)}$$

RC Integrator:

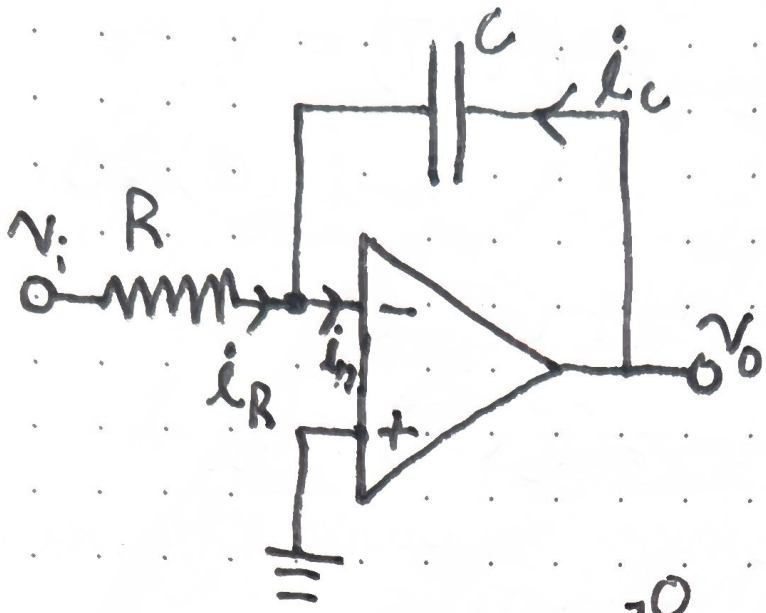

Use KCL:

$$i_R + i_c - \cancel{i_n}^{\,0} = 0$$

$$\Rightarrow i_R = -i_c$$

Also $v_n = v_p = 0$

$$i_R = \frac{v_i - \cancel{v_n}^{\,0}}{R} = v_i/R \qquad i_c = C\frac{d(v_o - \cancel{v_n}^{\,0})}{dt} = C\frac{dv_o}{dt}$$

$$\Rightarrow \frac{v_i}{R} = -C\frac{dv_o}{dt} \Rightarrow \frac{-1}{RC}v_i = \frac{dv_o}{dt}$$

$$\Rightarrow \int_{t_0}^{t} \frac{dv_o}{dt'}\,dt' = \frac{-1}{RC}\int_{t_0}^{t} v_i\,dt'$$

$$\boxed{\therefore v_o(t) = \frac{-1}{RC}\int_{t_0}^{t} v_i(t')\,dt + v_o(t_0)}$$

RC Differentiator:

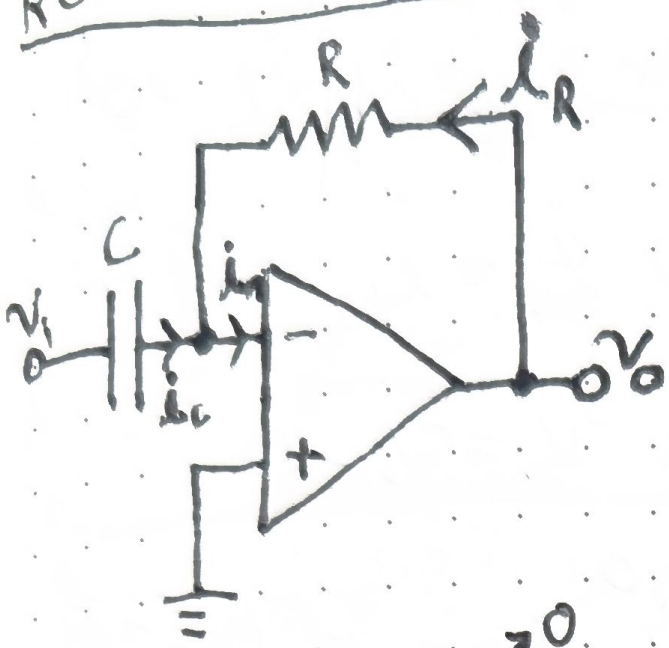

Use KCL:

$$i_c + i_R - \cancel{i_n}^{\,0} = 0$$

$$\Rightarrow i_R = -i_c$$

Also $v_n = v_p = 0$

$$i_R = \frac{v_o - \cancel{v_n}^{\,0}}{R} = v_o/R \qquad i_c = C\frac{d(v_i - \cancel{v_n}^{\,0})}{dt} = C\frac{dv_i}{dt}$$

$$\Rightarrow \frac{v_o}{R} = -C\frac{dv_i}{dt}$$

$$\boxed{\therefore\ v_o(t) = -RC\frac{dv_i(t)}{dt}}$$

ex/

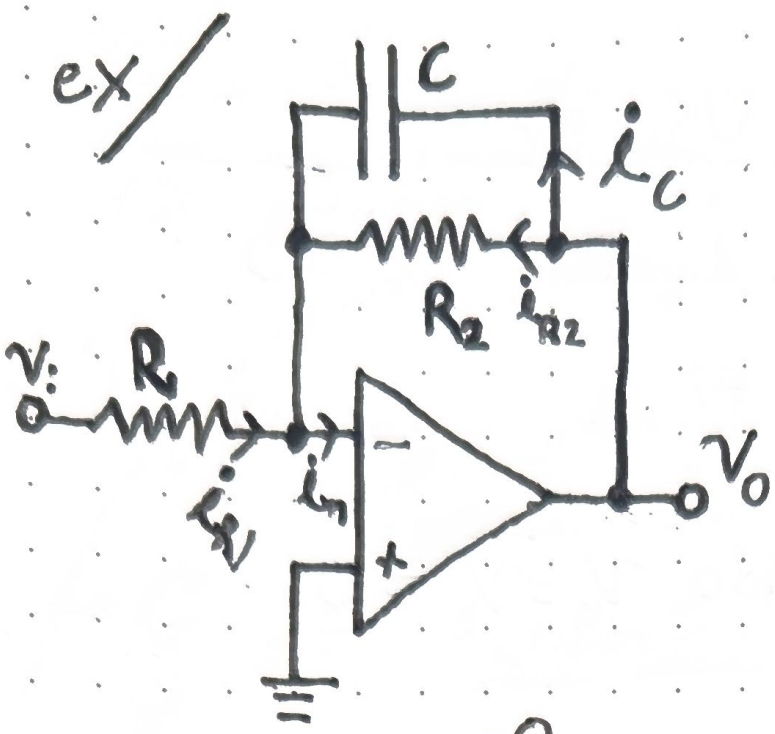

Use KCL:

$$i_{R1} + i_{R2} + i_C - i_n = 0$$

$$\Rightarrow i_{R1} + i_{R2} = -i_C$$

Also $v_n = v_p = 0$

$$i_{R1} = \frac{v_i - \cancel{v_n}^{\,0}}{R_1} \qquad i_{R2} = \frac{v_o - \cancel{v_n}^{\,0}}{R_2} \qquad i_C = C\frac{d(v_o - \cancel{v_n}^{\,0})}{dt}$$

$$\Rightarrow i_{R1} = v_i/R_1 \qquad i_{R2} = v_o/R_2 \qquad i_C = C\frac{dv_o}{dt}$$

$$\Rightarrow \frac{v_i}{R_1} + \frac{v_o}{R_2} = -C\frac{dv_o}{dt}$$

$$\boxed{\therefore \frac{dv_o(t)}{dt} + \frac{1}{R_2 C} v_o(t) = \frac{-1}{R_1 C} v_i(t)}$$

The Solution will have the form:

$$v_o(t) = v_{o,homo}(t) + v_{o,Part}(t)$$

- Where $v_{o,homo}(t)$ is the solution when $v_i = 0$
- Where $v_{o,Part}(t)$ depends on the form of $v_i(t)$