Name:_____

Battery Voltage:_____V

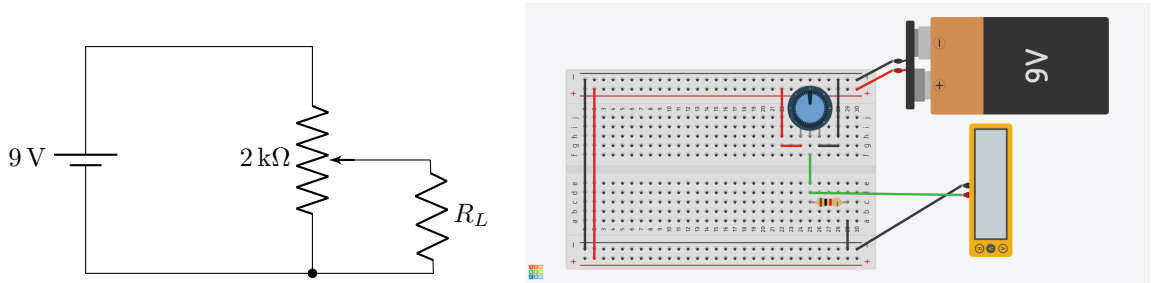

Figure 1: Voltage divider

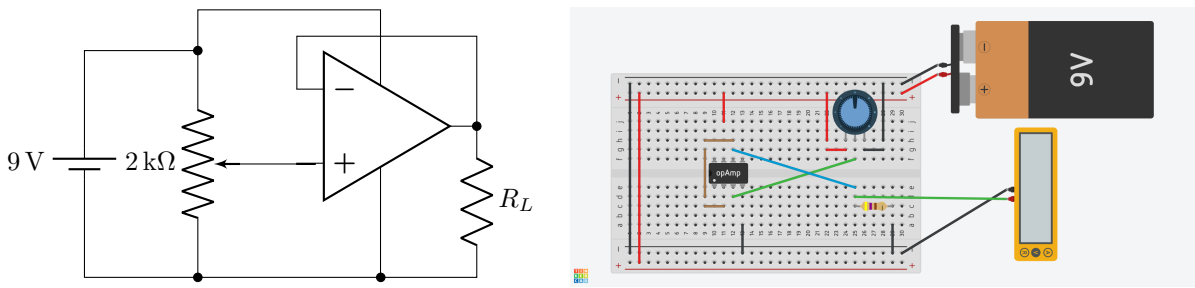

Figure 2: Voltage divider with buffer

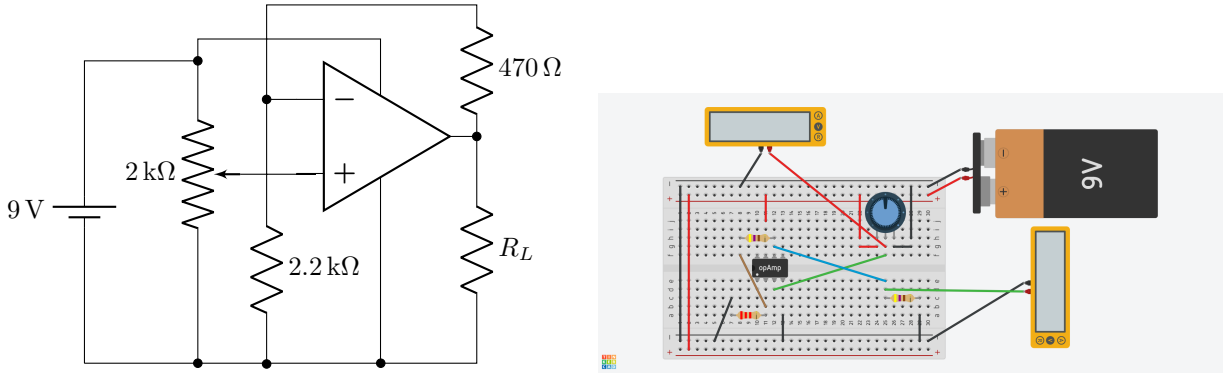

Figure 3: Voltage divider with non-inverting amplifier

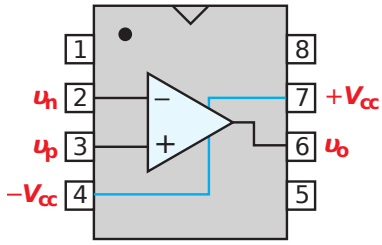

Ulaby *et al.* Figure 4-2

Step 1: Build the circuit in Figure 1, starting with $R_L = \infty$ (open circuit).

- The center pin of the potentiometer is the variable pin.
- Our 470 Ωs are YELLOW VIOLET BLACK BLACK BROWN
- Our 1 kΩs are BROWN BLACK BLACK BROWN BROWN
- Our 2.2 kΩs are RED RED BLACK BROWN BROWN

Measure the voltage across R_L for three potentiometer positions: all the way counter-clockwise, centered, and all the way clockwise. After completing this for $R_L = \infty$, repeat for $R_L = 470\,\Omega$, $R_L = 1\,\text{k}\Omega$, and $R_L = 2.2\,\text{k}\Omega$. Record your measurements in Table 1.

Question 1.1: For Figure 1, does the voltage across R_L depend on the value of R_L, the potentiometer, or both?

Step 2: Build the circuit in Figure 2, starting with $R_L = \infty$ (open circuit). Again repeat the experiment in the first step and record the measurements of V_{R_L} in Table 1.

Question 2.1: For Figure 2, does the voltage across R_L depend on the value of R_L, the potentiometer, or both?

Step 3: Lastly build the circuit in Figure 3, starting with $R_L = \infty$ (open circuit). Repeat the experiment in the first step yet again and record the measurements of V_{R_L} in Table 1. However, this time also measure the voltage from the potentiometer center pin (V_{pot}) for each case.

Question 3.1: What is the gain of the op-amp circuit in Figure 3?

Question 3.2: Finally, for Figure 3, does the voltage across R_L depend on the value of R_L, the potentiometer, or both?

Table 1: Measured values across R_L

		Figure 1	Figure 2	Figure 3	
Potentiometer	R_L	V_{R_L} (V)	V_{R_L} (V)	V_{R_L} (V)	V_{pot} (V)
Counter-Clockwise ↶	470 Ω	_____	_____	_____	_____
Centered ↑	470 Ω	_____	_____	_____	_____
Clockwise ↷	470 Ω	_____	_____	_____	_____
Counter-Clockwise ↶	1 kΩ	_____	_____	_____	_____
Centered ↑	1 kΩ	_____	_____	_____	_____
Clockwise ↷	1 kΩ	_____	_____	_____	_____
Counter-Clockwise ↶	2.2 kΩ	_____	_____	_____	_____
Centered ↑	2.2 kΩ	_____	_____	_____	_____
Clockwise ↷	2.2 kΩ	_____	_____	_____	_____