Wk12L1: Filters

Giles Blaney, PhD

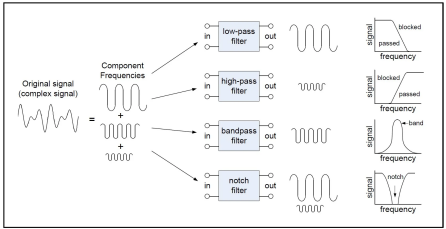

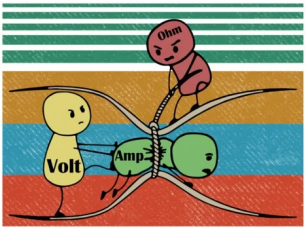

Tufts UNIVERSITY | School of Engineering

Mon. Nov. 17

Transfer Functions

$$H(\omega) = \frac{\widetilde{V}_{out}(\omega)}{\widetilde{V}_{in}(\omega)}$$

Filter Types

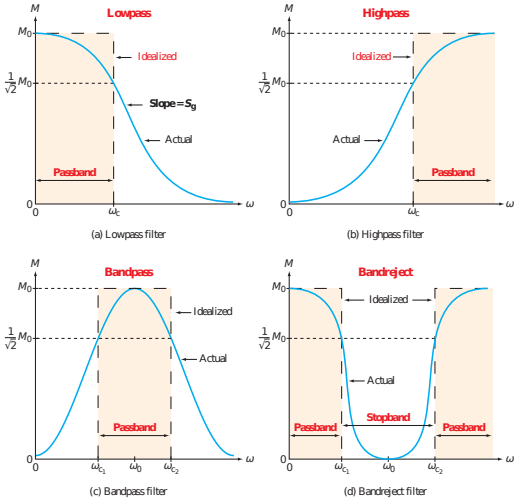

Figure 9-2: Typical magnitude spectral responses for the four types of filters.

- **Lowpass**: Suppresses frequencies **above** ω_c
- **Highpass**: Suppresses frequencies **below** ω_c
- **Bandpass**: Suppresses frequencies **below** ω_{c_1} and **above** ω_{c_2}
- **Bandreject**: Suppresses frequencies **between** ω_{c_1} and ω_{c_2}

Note: $M = |H|$

Filter Characteristics

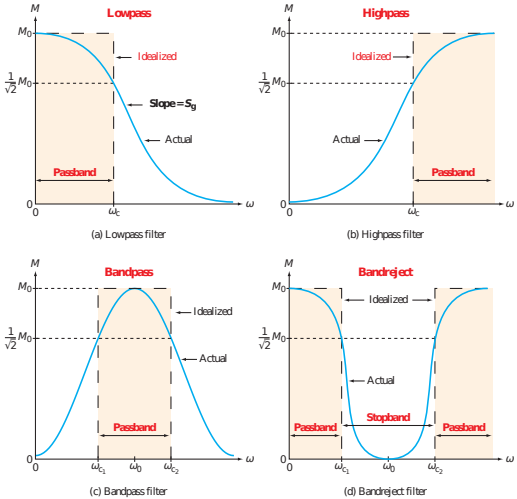

(a) Lowpass filter (b) Highpass filter (c) Bandpass filter (d) Bandreject filter

Figure 9-2: Typical magnitude spectral responses for the four types of filters.

- **Gain factor** $M_0 = |H(\omega_{passband})|$: The gain of the filter in the passband
  - Lowpass: $M_0 = |H(\omega = 0)|$
  - Highpass: $M_0 = |H(\omega \to \infty)|$
- **Corner frequency** ω_c: Defined by $|H(\omega_c)| = M_0/\sqrt{2}$
- **Bandwidth** B: The range of frequency which corresponds to the passband
  - Lowpass: $B = \omega_c$
  - Bandpass: $B = \omega_{c_2} - \omega_{c_1}$

Additional Filter Characteristics

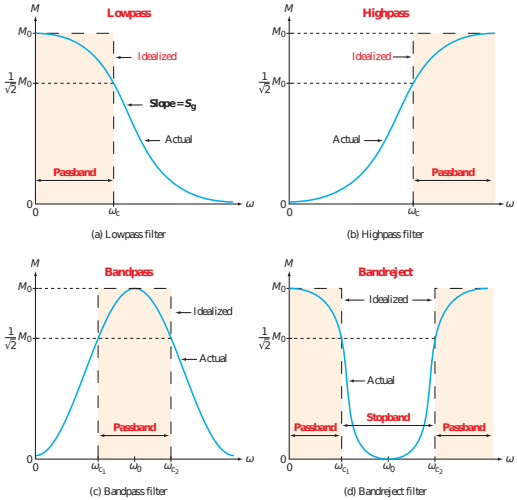

Figure 9-2: Typical magnitude spectral responses for the four types of filters.

- **Resonant frequency** ω_0: When the input impedance of a circuit is real (imaginary part is zero)
  - RL circuit: $\omega_0 = 0$ (DC)
  - RC circuit: $\omega_0 \to \infty$
  - Series RLC: $\omega_0 = 1/\sqrt{LC}$
- **Gain roll-off rate** S_g: The slope of $|H(\omega)|$ outside the passband
- **Quality factor** Q: The degree of frequency selectivity or the relative narrowness of the filter
  - Bandpass: $Q = \omega_0/B$

The Decibel (dB) Scale

$$G_{power}\,[\mathrm{dB}] = 10\log_{10}\left(P_{out}/P_{in}\right)$$
$$= 20\log_{10}\left(|\widetilde{V}_{out}|/|\widetilde{V}_{in}|\right)$$
$$= 20\log_{10}\left(|H|\right)$$

1st Order Highpass 1/2

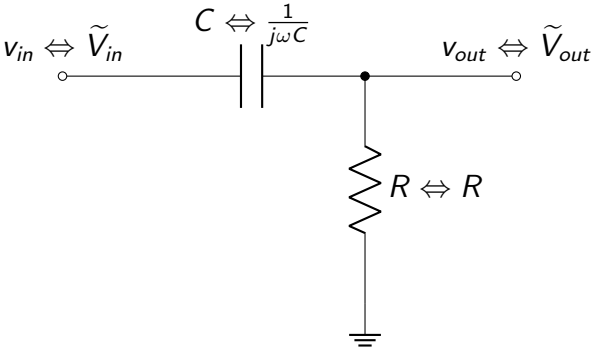

$$\frac{\widetilde{V}_{out}}{\widetilde{V}_{in}} = H(\omega) = \frac{R}{R - \frac{j}{\omega C}} = \frac{j\omega RC}{1 + j\omega RC}$$

1st Order Highpass 2/2

- By solving $|H(\omega_c)| = 1/\sqrt{2}$:

$$\omega_c = \frac{1}{RC}$$

$$\omega_c = 1000\,\mathrm{rad\,s^{-1}}$$
$$\Rightarrow f_c = 159\,\mathrm{Hz}$$

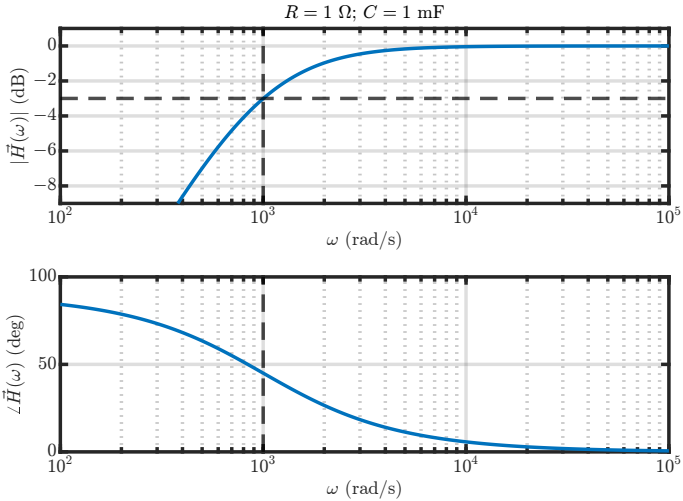

1st Order Lowpass 1/2

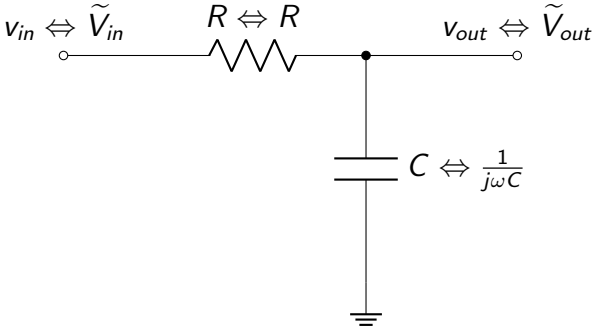

$$\frac{\widetilde{V}_{out}}{\widetilde{V}_{in}} = H(\omega) = \frac{-\frac{j}{\omega C}}{R - \frac{j}{\omega C}} = \frac{1}{1 + j\omega RC}$$

1st Order Lowpass 2/2

- By solving $|H(\omega_c)| = 1/\sqrt{2}$:

$$\omega_c = \frac{1}{RC}$$

$$\omega_c = 1000\,\mathrm{rad\,s^{-1}}$$
$$\Rightarrow f_c = 159\,\mathrm{Hz}$$

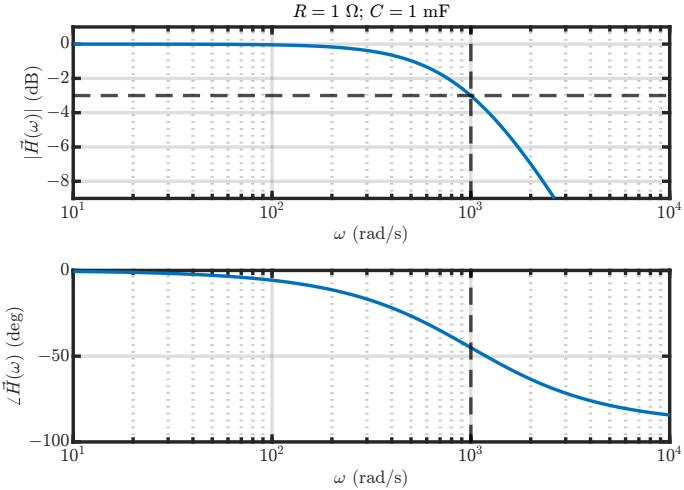

2nd Order Bandpass 1/2

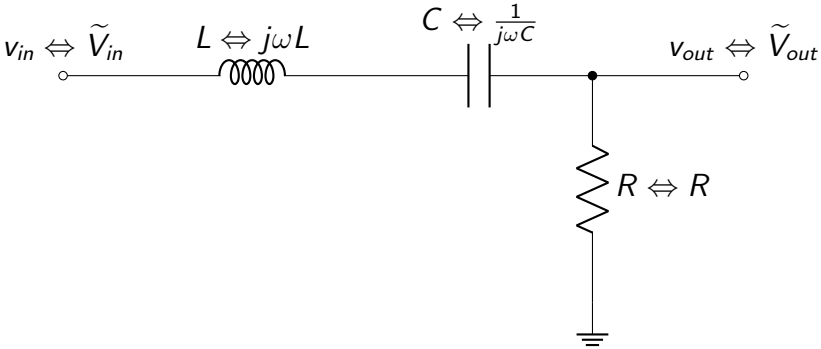

$$\frac{\widetilde{V}_{out}}{\widetilde{V}_{in}} = H(\omega) = \frac{R}{R + j\left(\omega L - \frac{1}{\omega C}\right)} = \frac{j\omega RC}{(1 - \omega^2 LC) + j\omega RC}$$

2nd Order Bandpass 2/2

- $\omega_0 = 1/\sqrt{LC} = 1000\,\text{rad}\,\text{s}^{-1}$
  $\Rightarrow f_0 = 159\,\text{Hz}$
- By solving $|H(\omega_c)| = 1/\sqrt{2}$:

$$\omega_{c_{1,2}} = \pm\frac{R}{2L} + \sqrt{\left(\frac{R}{2L}\right)^2 + \frac{1}{LC}}$$

$\omega_{c_{1,2}} = [618, 1618]\ \text{rad}\,\text{s}^{-1}$
$\Rightarrow f_{c_{1,2}} = [98, 258]\ \text{Hz}$

- $B = R/L = 1000\,\text{rad}\,\text{s}^{-1}$
  $\Rightarrow B = 159\,\text{Hz}$
- $Q = \omega_0/B = 1$

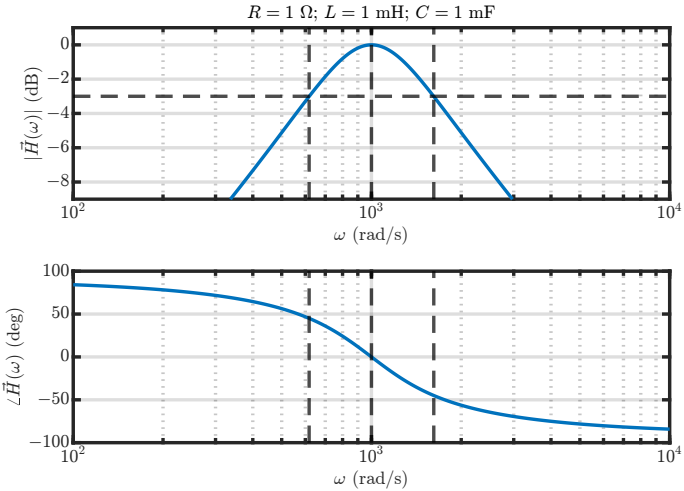

More Passive Filters

2nd Order Highpass 1/2

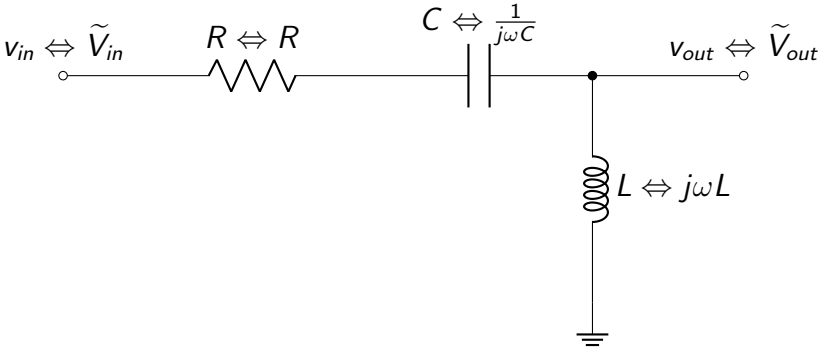

$$\frac{\widetilde{V}_{out}}{\widetilde{V}_{in}} = H(\omega) = \frac{j\omega L}{R + j\left(\omega L - \frac{1}{\omega C}\right)} = \frac{-\omega^2 LC}{(1-\omega^2 LC) + j\omega RC}$$

2nd Order Highpass 2/2

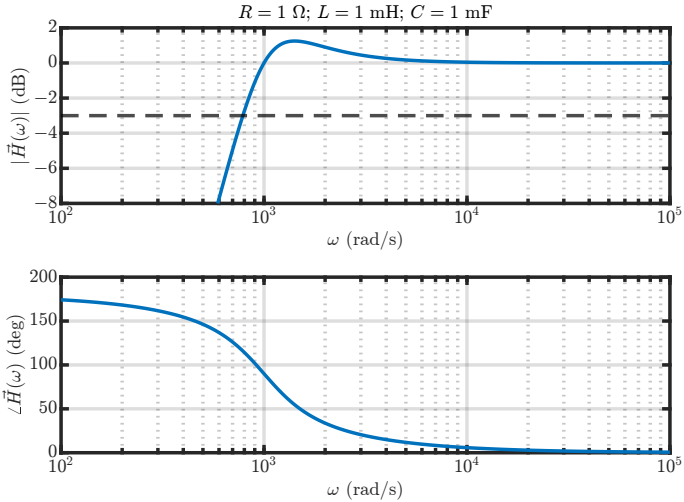

2nd Order Lowpass 1/2

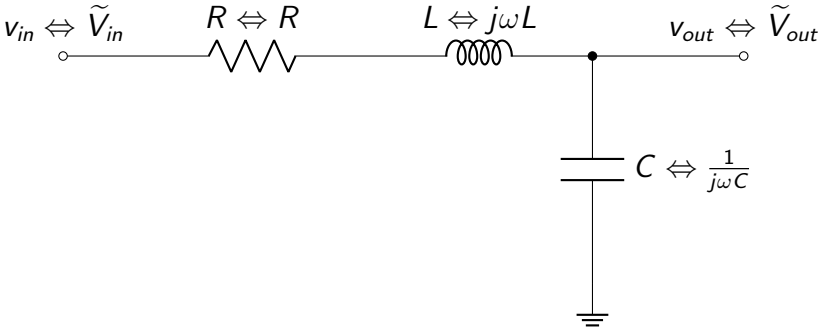

$$\frac{\widetilde{V}_{out}}{\widetilde{V}_{in}} = H(\omega) = \frac{1/(j\omega C)}{R + j\left(\omega L - \frac{1}{\omega C}\right)} = \frac{1}{(1-\omega^2 LC) + j\omega RC}$$

2nd Order Lowpass 2/2

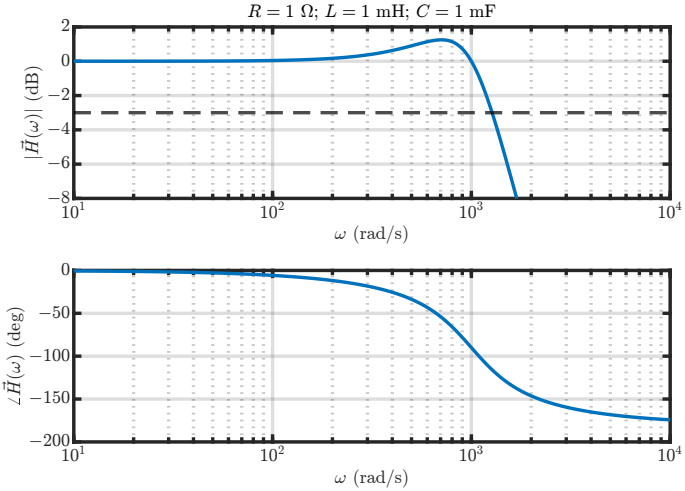

Active Filters

Active Lowpass 1/2

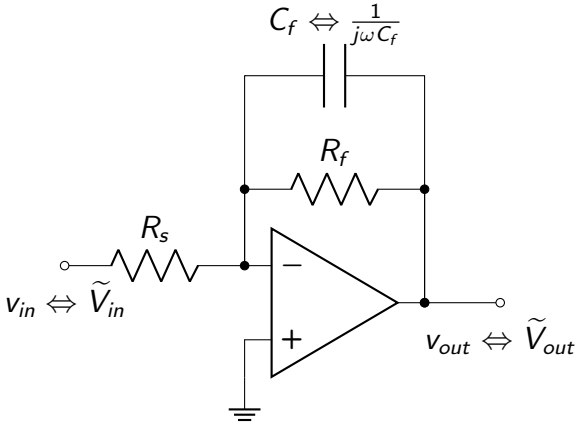

$$\frac{\widetilde{V}_{out}}{\widetilde{V}_{in}} = H(\omega) = -\frac{Z_f}{Z_s}$$

$$= -\frac{R_f / (1 + j\omega R_f C_f)}{R_s}$$

$$= -\left(\frac{R_f}{R_s}\right)\left(\frac{1}{1 + j\omega R_f C_f}\right)$$

Active Lowpass 2/2

- By solving $|H(\omega \to 0)| = M_0$:

$$M_0 = \frac{R_f}{R_s}$$

$M_0 = 10 = 20$ dB

- By solving $|H(\omega_c)| = M_0/\sqrt{2}$:

$$\omega_c = \frac{1}{R_f C_f}$$

$\omega_c = 1000\,\mathrm{rad\,s^{-1}}$
$\Rightarrow f_c = 159\,\mathrm{Hz}$

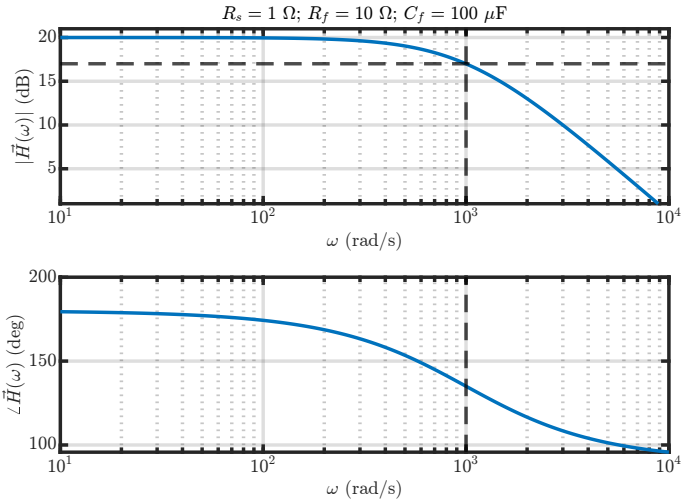

Active Highpass 1/2

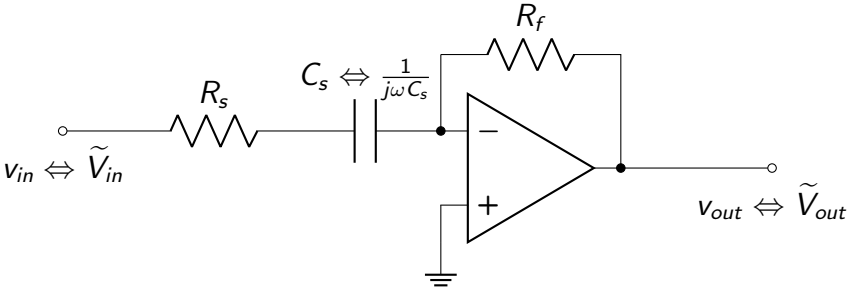

$$\frac{\widetilde{V}_{out}}{\widetilde{V}_{in}} = H(\omega) = -\frac{Z_f}{Z_s} = -\frac{R_f}{R_s + \frac{1}{j\omega C_s}} = -\frac{j\omega R_s C_s R_f}{j\omega R_s^2 C_s + R_s} = -\left(\frac{R_f}{R_s}\right)\left(\frac{j\omega R_s C_s}{1 + j\omega R_s C_s}\right)$$

Active Highpass 2/2

- By solving $|H(\omega \to \infty)| = M_0$:

$$M_0 = \frac{R_f}{R_s}$$

$M_0 = 10 = 20$ dB

- By solving $|H(\omega_c)| = M_0/\sqrt{2}$:

$$\omega_c = \frac{1}{R_f C_f}$$

$\omega_c = 1000\,\mathrm{rad\,s^{-1}}$
$\Rightarrow f_c = 159\,\mathrm{Hz}$

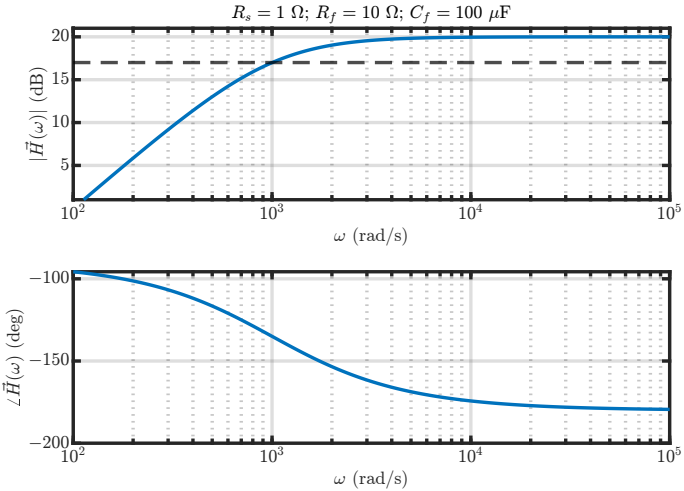

Filter Cascades

Apply Thévenin to Cascade Filters

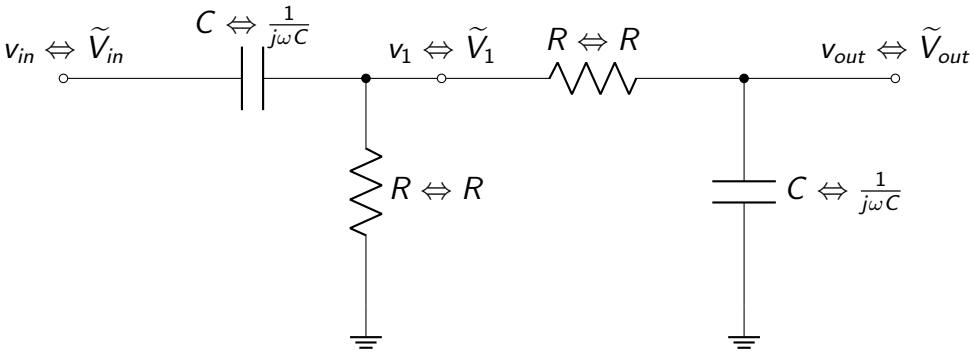

Design Example: Active Bandreject 1/9

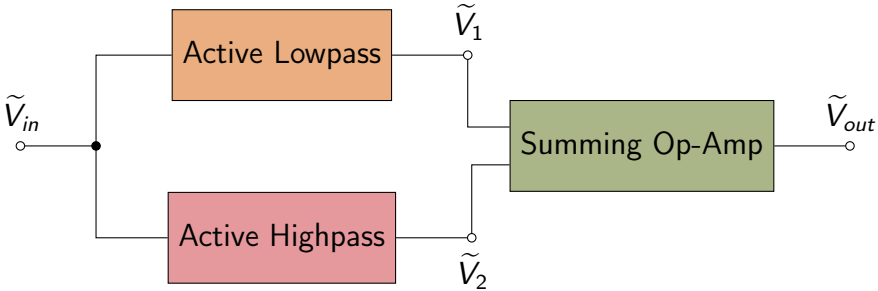

Design Example: Active Bandreject 2/9

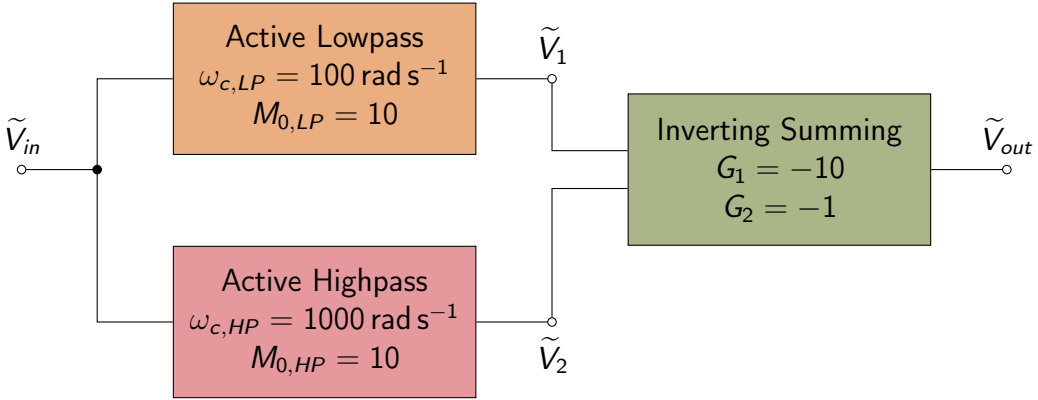

Design Example: Active Bandreject 3/9

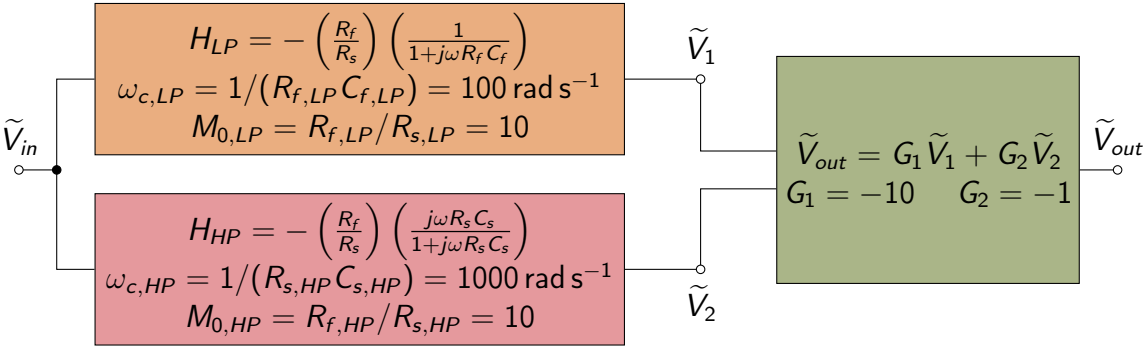

Design Example: Active Bandreject 4/9

$$H_{LP} = -\left(\frac{R_f}{R_s}\right)\left(\frac{1}{1+j\omega R_f C_f}\right)$$
$$\omega_{c,LP} = 1/(R_{f,LP}C_{f,LP}) = 100\,\mathrm{rad\,s^{-1}}$$
$$M_{0,LP} = R_{f,LP}/R_{s,LP} = 10$$

Choose $R_{s,LP} = 100\,\Omega$

$$M_{0,LP} = 10 = R_{f,LP}/(100\,\Omega) \Rightarrow R_{f,LP} = 1\,\mathrm{k\Omega}$$

$$\omega_{c,LP} = 100\,\mathrm{rad\,s^{-1}} = 1/((1\,\mathrm{k\Omega})C_{f,LP}) \Rightarrow C_{f,LP} = 10\,\mu\mathrm{F}$$

Design Example: Active Bandreject 5/9

$$H_{HP} = -\left(\frac{R_f}{R_s}\right)\left(\frac{j\omega R_s C_s}{1+j\omega R_s C_s}\right)$$
$$\omega_{c,HP} = 1/(R_{s,HP} C_{s,HP}) = 1000\,\mathrm{rad\,s^{-1}}$$
$$M_{0,HP} = R_{f,HP}/R_{s,HP} = 10$$

$$\text{Choose } R_{s,HP} = 100\,\Omega$$

$$M_{0,HP} = 10 = R_{f,HP}/(100\,\Omega) \Rightarrow R_{f,HP} = 1\,\mathrm{k\Omega}$$

$$\omega_{c,HP} = 1000\,\mathrm{rad\,s^{-1}} = 1/((100\,\Omega)C_{s,HP}) \Rightarrow C_{s,HP} = 10\,\mu\mathrm{F}$$

Design Example: Active Bandreject 6/9

$$\widetilde{V}_{out} = G_1\widetilde{V}_1 + G_2\widetilde{V}_2$$
$$G_1 = -10 \qquad G_2 = -1$$

Choose $R_{f,sum} = 1\,\mathrm{k}\Omega$

$$G_1 = -10 = -R_{f,sum}/R_{1,sum} = -(1\,\mathrm{k}\Omega)/R_{1,sum} \Rightarrow R_{1,sum} = 100\,\Omega$$

$$G_2 = -1 = -R_{f,sum}/R_{2,sum} = -(1\,\mathrm{k}\Omega)/R_{2,sum} \Rightarrow R_{2,sum} = 1\,\mathrm{k}\Omega$$

Design Example: Active Bandreject 7/9

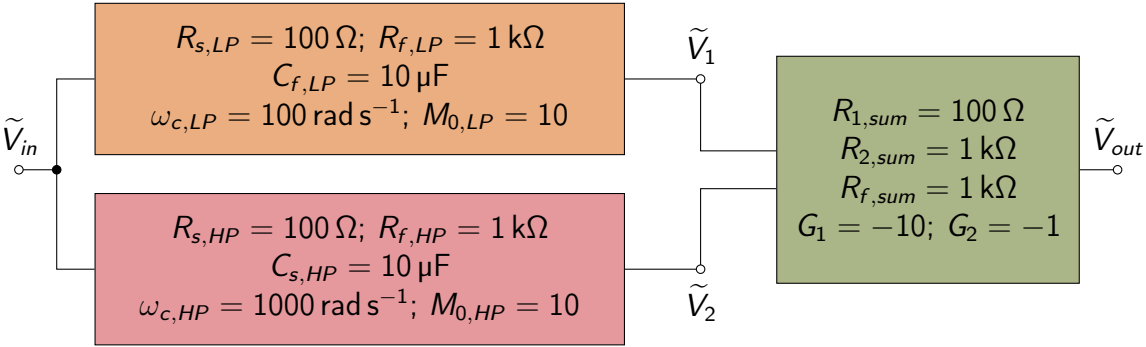

Design Example: Active Bandreject 8/9

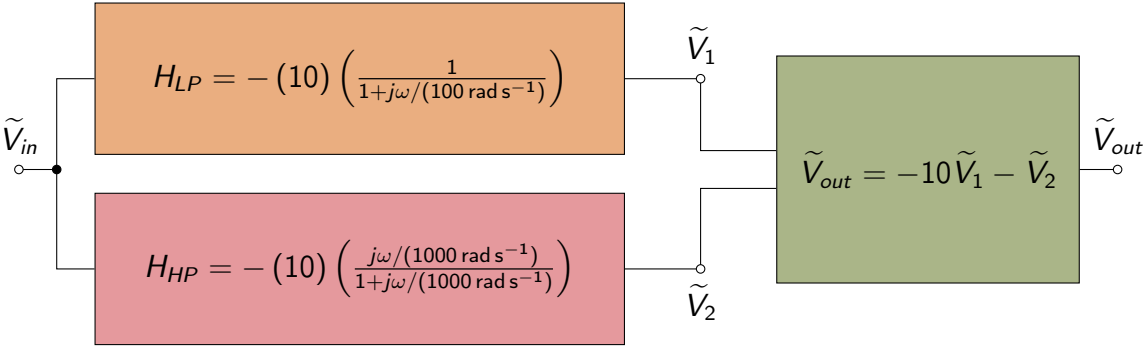

$$\widetilde{V}_1 = H_{LP}\widetilde{V}_{in} \qquad \widetilde{V}_2 = H_{HP}\widetilde{V}_{in} \qquad \Rightarrow \qquad \widetilde{V}_{out} = -10H_{LP}\widetilde{V}_{in} - H_{HP}\widetilde{V}_{in}$$

$$\Rightarrow \widetilde{V}_{out} = -\widetilde{V}_{in}\left(10H_{LP} + H_{HP}\right) \qquad \therefore \boxed{H_{total} = -\left(10H_{LP} + H_{HP}\right)}$$

Design Example: Active Bandreject 9/9

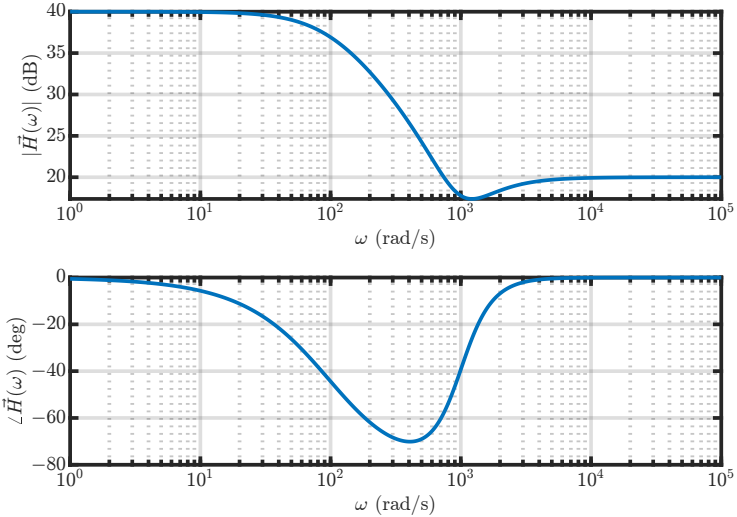

Reminders

- HW 8 Due
- HW 9 Posted