Wk4L2: Operational Amplifiers

Giles Blaney, PhD

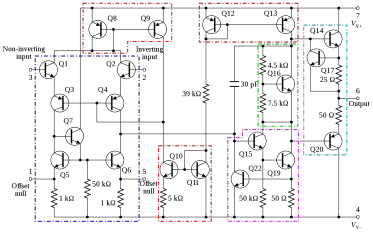

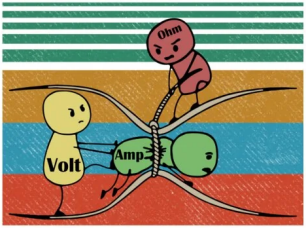

Tufts UNIVERSITY | School of Engineering

Wed. Sept. 24

Thévenin's Theorem

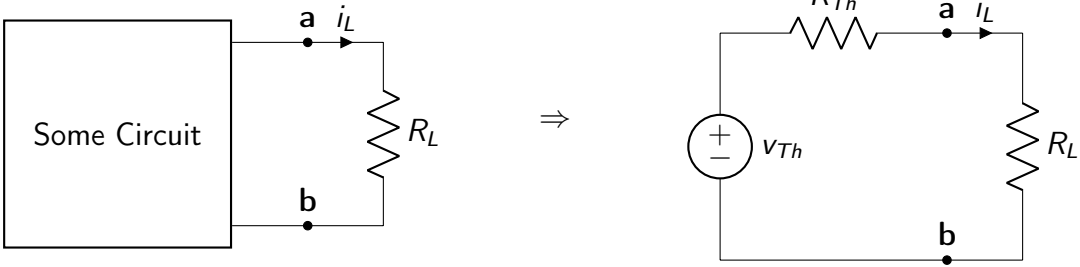

Op-Amp Circuit Diagram Component

- We will treat this as a black box
- 2 Inputs:
  - Inverting ($-$)
  - Non-inverting ($+$)
- 1 Output
- 2 Power supply rails
  - Positive (V_+)
  - Negative (V_-)

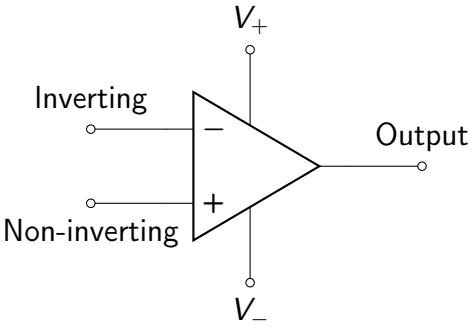

Op-Amp Model

Note: The output (v_o) can not go outside of the range of the power rails (V_- to V_+) (*i.e.*, $V_- \leq v_o \leq V_+$)

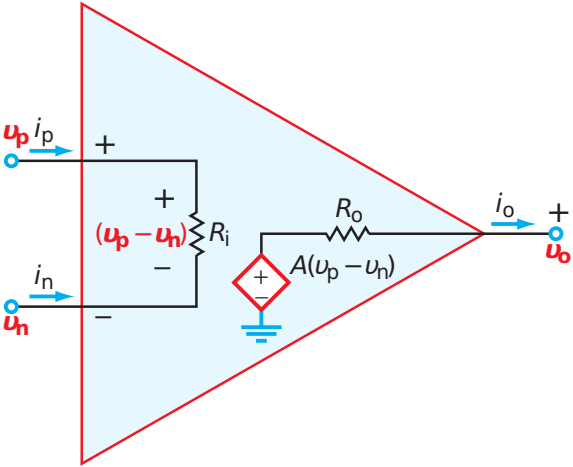

Negative Feedback

See Page 195 in Ulaby *et al.*

Feedback refers to taking a part of the **output signal and feeding it back into the input**. It is called positive feedback if it increases the intensity of the input signal, and it is called **negative feedback** if it decreases it. In negative feedback, the **output terminal is connected to the v_n terminal**, either directly or through a resistor.

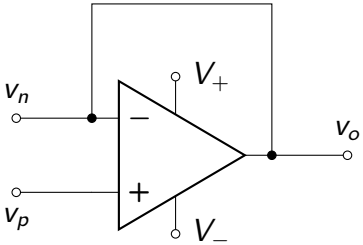

Negative Feedback

The 741

The 741 Chip

CHN
UA741CN
K9E517

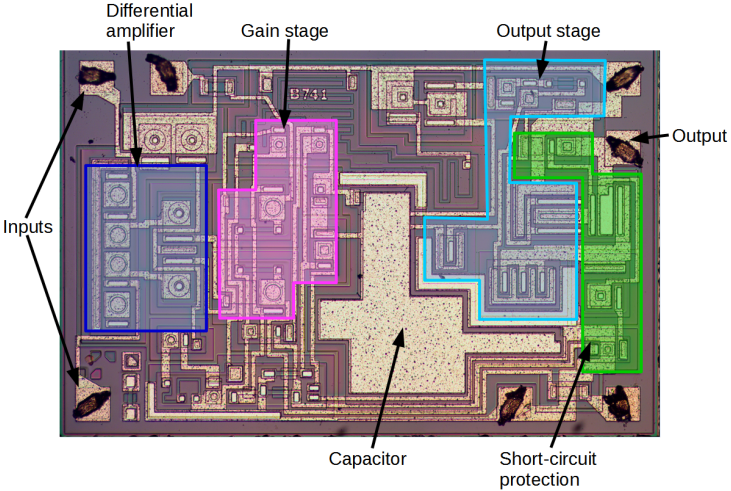
Differential amplifier
Gain stage
Output stage
Output
Inputs
Capacitor
Short-circuit protection

741 Internal Circuit Diagram

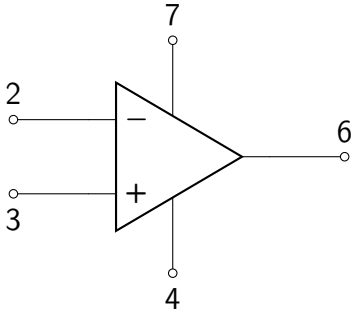

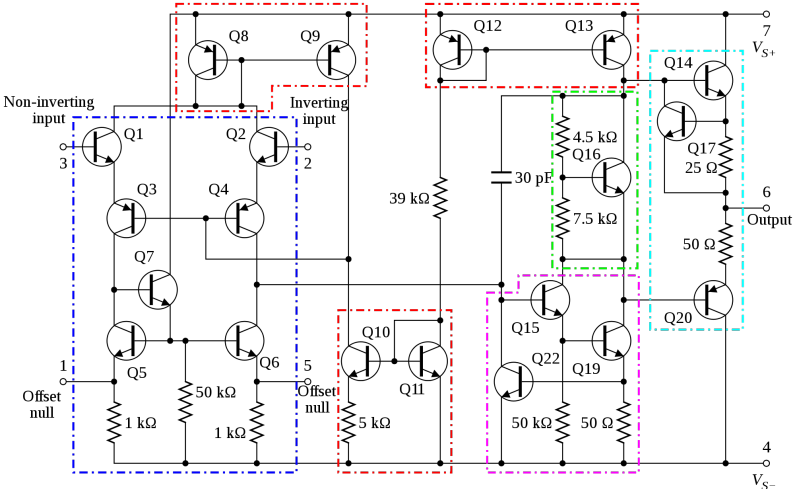

741 Pinout

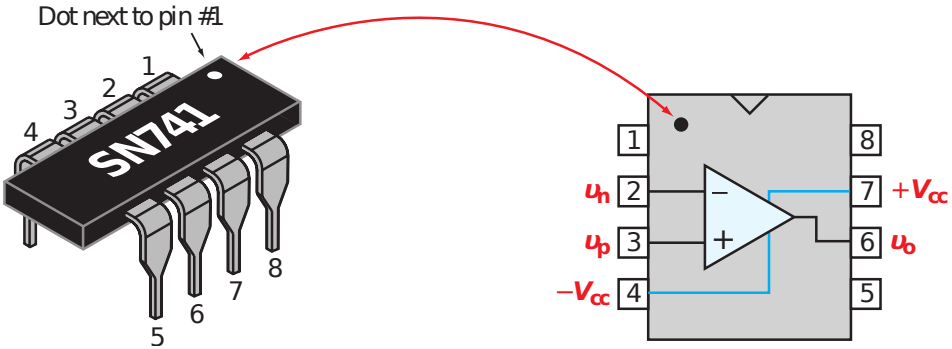

Ideal Op-Amp

Ideal Op-Amp Characteristics

For an **ideal** op-amp:

- Open loop gain $A \to \infty$
- Input resistance $R_i \to \infty\ \Omega$
- Output resistance $R_o \to 0\ \Omega$

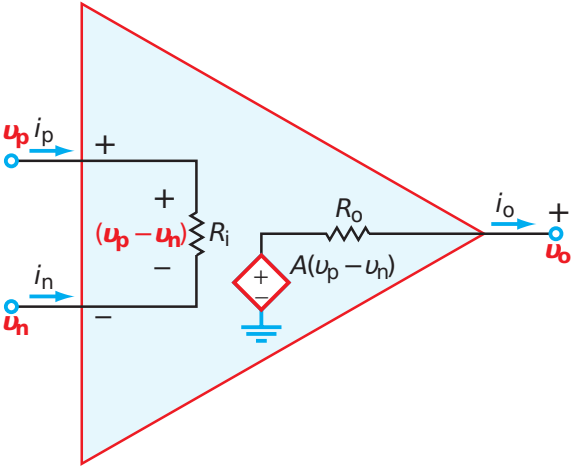

Ideal Op-Amp Voltage Constraint

$$A\left(v_p - v_n\right) = v_o$$

$$v_p - v_n = \frac{v_o}{A}$$

For ideal:

$$\lim_{A \to \infty} \frac{v_o}{A} = 0$$

$$\therefore \boxed{v_p = v_n}$$

Non-inverting Amplifier Configuration

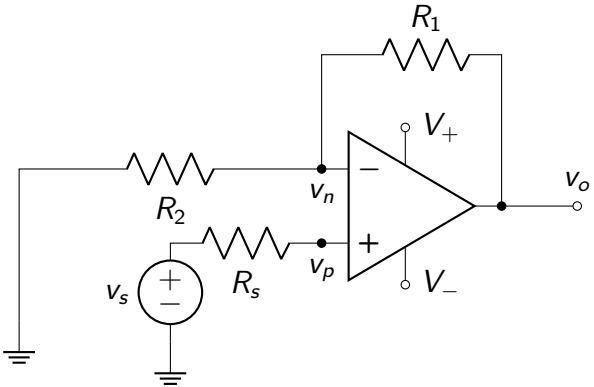
R_1
V_+
v_o
v_n
R_2
v_p
v_s
R_s
V_-

Non-inverting Amplifier

By voltage division:

$$v_n = \frac{R_2}{R_1 + R_2} v_o$$

Apply voltage constraint ($v_p = v_n$)

$$v_s = \frac{R_2}{R_1 + R_2} v_o \Rightarrow v_o = \frac{R_1 + R_2}{R_2} v_s$$

$$\therefore \boxed{\frac{v_o}{v_s} = G = \frac{R_1 + R_2}{R_2}}$$

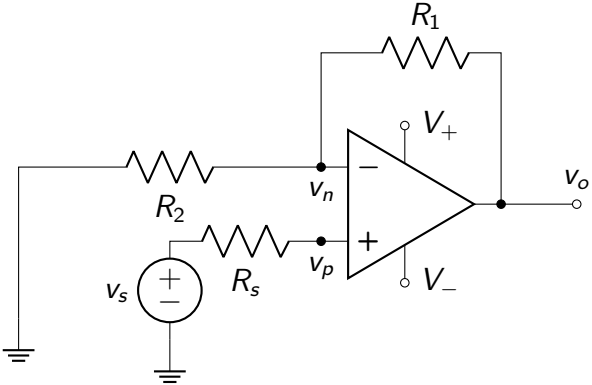

Reminders

- Recitation Friday