Wk5L2: Breadboards & Review

Giles Blaney, PhD

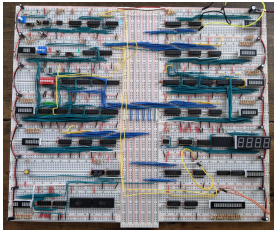

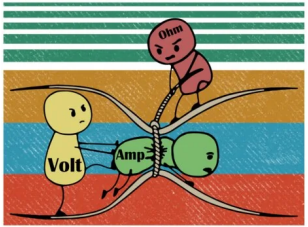

Tufts UNIVERSITY | School of Engineering

Mon. Oct. 1

Mathematical and Physical Models

Ideal op amp
$$v_p = v_n$$
$$i_p = i_n = 0$$

Noninverting amp*
$$G = \frac{v_o}{v_s} = \frac{R_1 + R_2}{R_2}$$

Inverting amp*
$$G = \frac{v_o}{v_s} = -\left(\frac{R_f}{R_s}\right)$$

Summing amp*
$$v_o = -R_f\left(\frac{v_1}{R_1} + \frac{v_2}{R_2}\right)$$

Difference amp*
$$v_o = G_2 v_2 + G_1 v_2$$

Voltage follower*
$$v_o = v_s$$

Instrumentation amp
$$v_o = \left(1 + \frac{2R}{R_2}\right)(v_2 - v_1)$$
(with gain-control resistor R_2)

MOSFET
$$V_{out} = V_{DD} - g R_D V_{in}$$

*See Table 4-3.

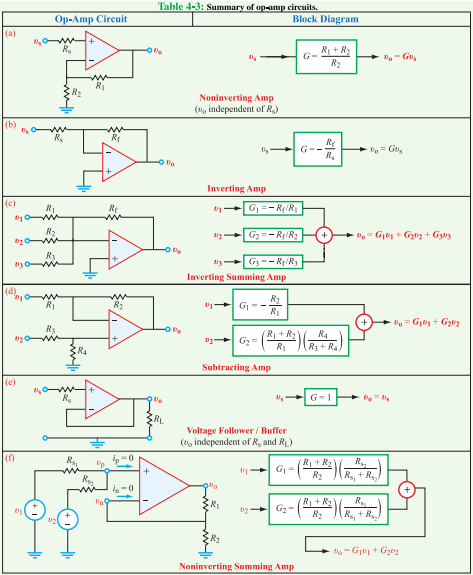

Breadboard Layout

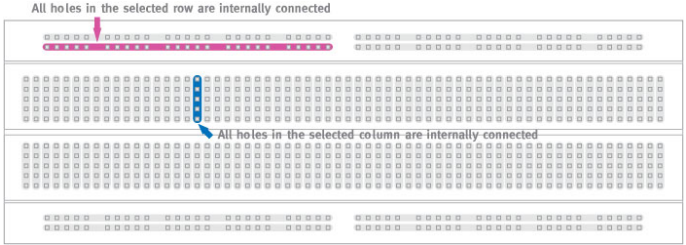

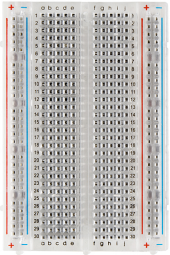

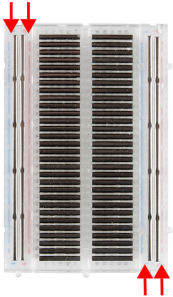

Sources:
https://wiring.org.co/learning/tutorials/breadboard/
https://learn.sparkfun.com/tutorials/how-to-use-a-breadboard/all

Example Circuit

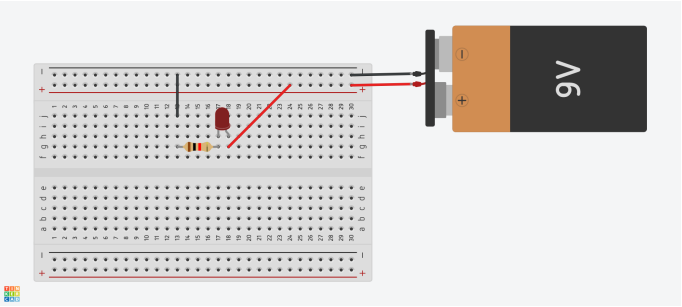

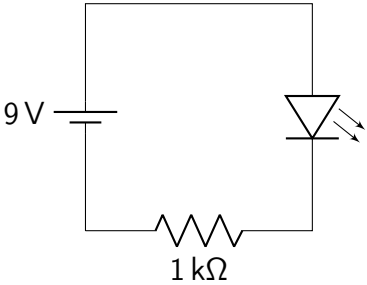

Image made with Tinkercad: https://www.tinkercad.com/

Review

Reminders

- Demo Monday
- Midterm on Wednesday Oct. 8th