Wk8L2: Capacitor Op-Amps

Giles Blaney, PhD

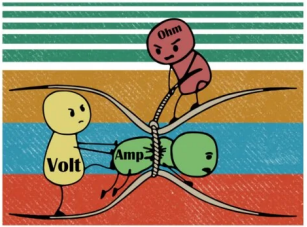

Tufts UNIVERSITY | School of Engineering

Wed. Oct. 22

Capacitors, Inductors, and Resistor Capacitor (RC) Circuits

Table 5-4: Basic properties of R, L, and C.

Property	R	L	C
i–v relation	$i = \frac{v}{R}$	$i = \frac{1}{L}\int_{t_0}^{t} v\,dt' + i(t_0)$	$i = C\frac{dv}{dt}$
v-i relation	$v = iR$	$v = L\frac{di}{dt}$	$v = \frac{1}{C}\int_{t_0}^{t} i\,dt' + v(t_0)$
p (power transfer in)	$p = i^2R$	$p = Li\frac{di}{dt}$	$p = Cv\frac{dv}{dt}$
w (stored energy)	0	$w = \frac{1}{2}Li^2$	$w = \frac{1}{2}Cv^2$
Series combination	$R_{eq} = R_1 + R_2$	$L_{eq} = L_1 + L_2$	$\frac{1}{C_{eq}} = \frac{1}{C_1} + \frac{1}{C_2}$
Parallel combination	$\frac{1}{R_{eq}} = \frac{1}{R_1} + \frac{1}{R_2}$	$\frac{1}{L_{eq}} = \frac{1}{R_1} + \frac{1}{R_2}$	$C_{eq} = C_1 + C_2$
dc behavior	no change	short circuit	open circuit
Can v change instantaneously?	yes	yes	no
Can i change instantaneously?	yes	no	yes

Series RC Circuit Solution

1: If switch action is at $t = 0$, analyze circuit at $t = 0^-$ to determine initial conditions $v_C(0^-)$ and $i_C(0^-)$. Use this information to determine $v_C(0)$ and $i_C(0)$, at t immediately after the switch action. Remember that the voltage across a capacitor cannot change instantaneously (between $t = 0^-$ and $t = 0$), but the current can.

2: Analyze the circuit to determine $v_C(\infty)$, the voltage across the capacitor long after the switch action.

3: Determine the time constant $\tau = RC$.

4: Incorporate the information obtained in the previous three steps in Eq. (5.96):

$$v_C(t) = \left\{v_C(\infty) + [v_C(0) - v_C(\infty)]e^{-t/\tau}\right\}u(t).$$

5: If the switch action is at $t = T_0$ instead of $t = 0$, replace 0 with T_0 and use Eq. (5.98):

$$v_C(t) = \left\{v_C(\infty) + [v_C(T_0) - v_C(\infty)] \cdot e^{-(t-T_0)/\tau}\right\} \cdot u(t - T_0).$$

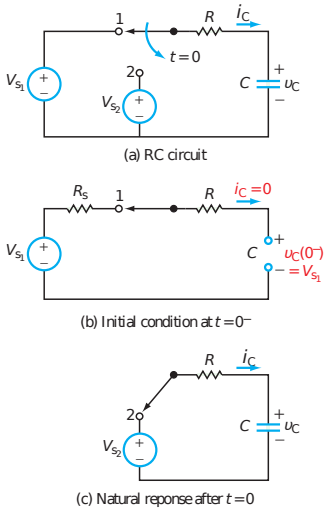

Figure 5-30: RC circuit switched from source V_{S_1} to source V_{S_2} at $t = 0$.

RC Integrator

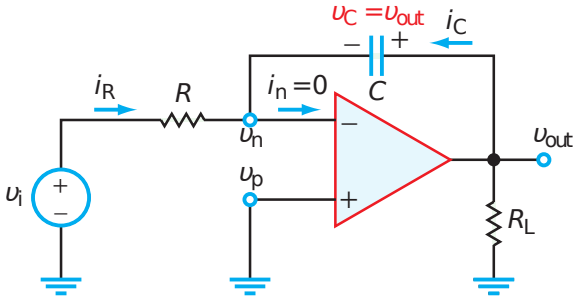

Figure 5-40: Integrator circuit.

RC Differentiator

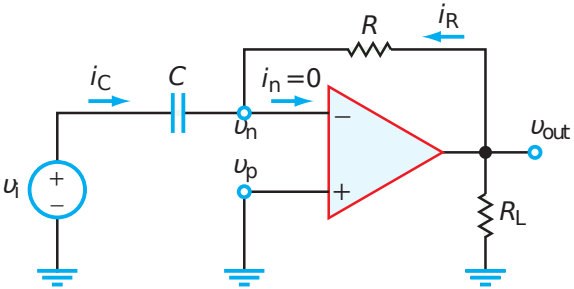

Figure 5-42: Differentiator circuit.

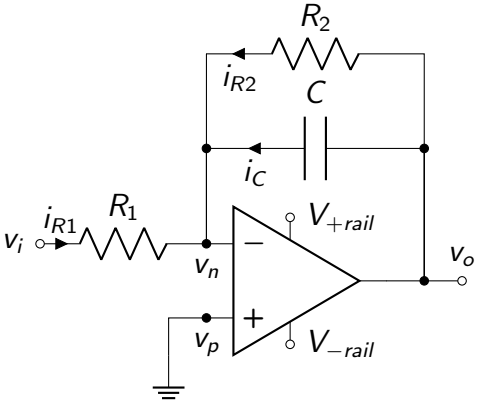
R_2
i_{R2}
C
i_C
i_{R1}
R_1
v_i
v_n
v_p
V_{+rail}
V_{-rail}
v_o

Summary

Table 5-5: Response forms of basic f rst-order circuits.

Circuit	Diagram	Response
RC	**Input:** dc circuit with switch action @ $t = T_0$ 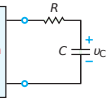	$v_C(t) = \{v_C(\infty) + [v_C(T_0) - v_C(\infty)]e^{-(t-T_0)/\tau}\}u(t - T_0)$ $(\tau = RC)$
RL	**Input:** dc circuit with switch action @ $t = T_0$	$i_L(t) = \{i_L(\infty) + [i_L(T_0) - i_L(\infty)]e^{-(t-T_0)/\tau}\}u(t - T_0)$ $(\tau = L/R)$
Ideal integrator	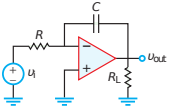	$v_{out}(t) = -\frac{1}{RC}\int_{t_0}^{t} v_i\, dt' + v_{out}(t_0)$
Ideal differentiator	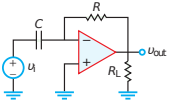	$v_{out}(t) = -RC\,\frac{dv_i}{dt}$

See Table 5-5 on Page 282 in Ulaby *et al.*

Reminders

- Recitation Friday