250915 Voltage Dividers

Voltage Divider:

ex/

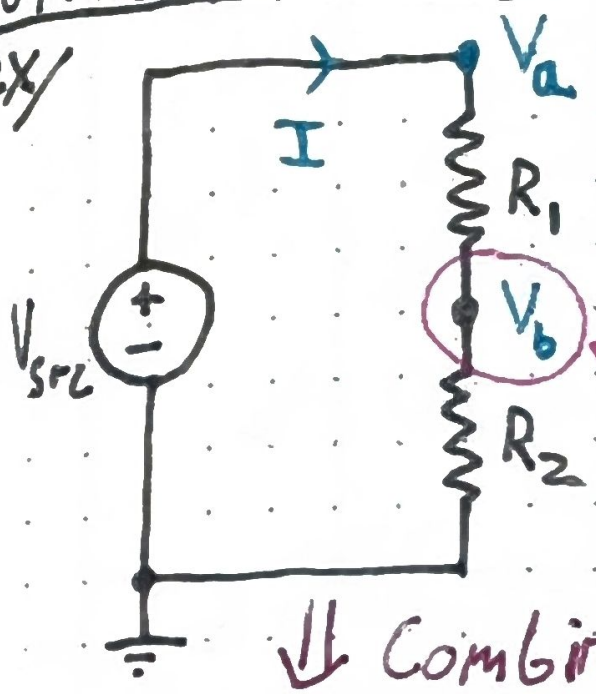

$V_a = V_{src}$

$V_{R1} = V_a - V_b$

$V_{R2} = V_b - 0 = V_b$

Want to find V_b

⇓ Combine R_1 and R_2 in Series

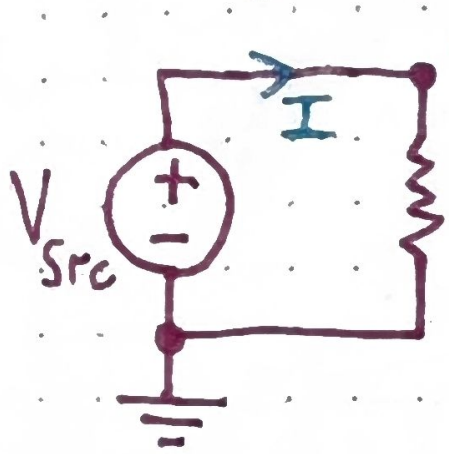

$R_{eq} = R_1 + R_2$

$$I = \frac{V_a - 0}{R_{eq}} = \frac{V_{src}}{R_1 + R_2}$$

⇒ Now we know I

Ohm's Law for R_1: $I = \frac{V_{R1}}{R_1} = \frac{V_{src}}{R_1 + R_2}$

$$\therefore V_{R1} = \frac{R_1}{R_1 + R_2} V_{src}$$

Ohm's Law for R_2: $I = \frac{V_{R2}}{R_2} = \frac{V_{src}}{R_1 + R_2}$

$$\therefore \boxed{V_{R2} = \frac{R_2}{R_1 + R_2} V_{src} = V_b}$$

ex/

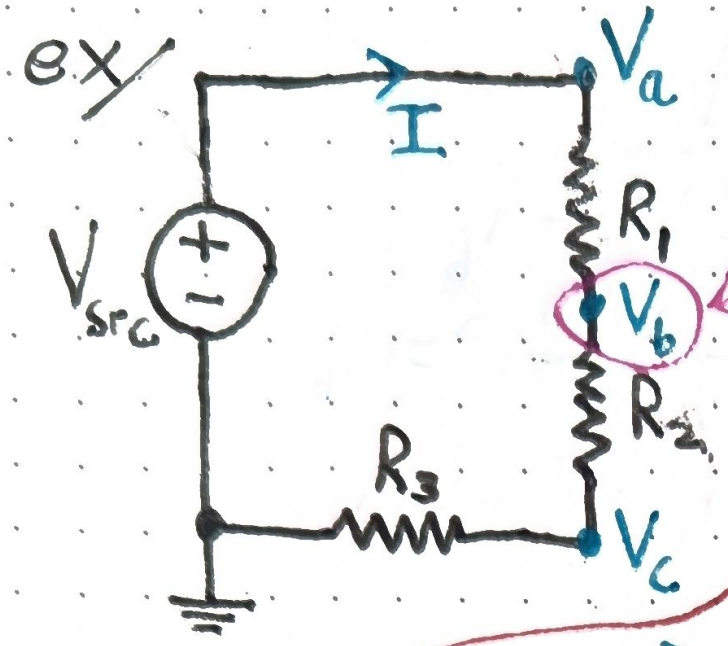

$V_a = V_{src}$

$V_{R1} = V_a - V_b$

$V_{R2} = V_b - V_c$

$V_{R3} = V_c - 0 = V_c$

Want to find V_b

$$\Rightarrow I = \frac{V_{src}}{R_{eq}} = \frac{V_{src}}{R_1 + R_2 + R_3}$$

Ohm's Law for R_1: $I = \frac{V_{R1}}{R_1} = \frac{V_{src}}{R_1 + R_2 + R_3}$

$$\therefore V_{R1} = \frac{R_1}{R_1 + R_2 + R_3} V_{src}$$

Voltage division for R_2 and R_3:

$$\therefore V_{R2} = \frac{R_2}{R_1 + R_2 + R_3} V_{src} \quad \therefore V_{R3} = \frac{R_3}{R_1 + R_2 + R_3} V_{src}$$

Now find node b Voltage:

$$V_{R2} = V_b - V_c = V_b - V_{R3} \Rightarrow V_b = V_{R2} + V_{R3}$$

$$\Rightarrow V_b = \frac{R_2}{R_1 + R_2 + R_3} V_{src} + \frac{R_3}{R_1 + R_2 + R_3} V_{src}$$

$$\therefore \boxed{V_b = \frac{R_2 + R_3}{R_1 + R_2 + R_3} V_{src}}$$

Notice we could use voltage division on this equiv. circuit:

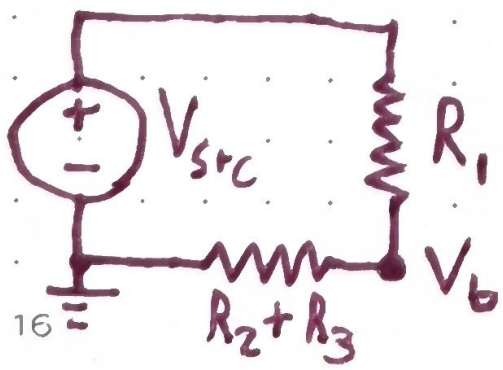

$$\Rightarrow V_{(R_2+R_3)} = V_b = \frac{R_2 + R_3}{R_1 + R_2 + R_3} V_{src}$$

ex/

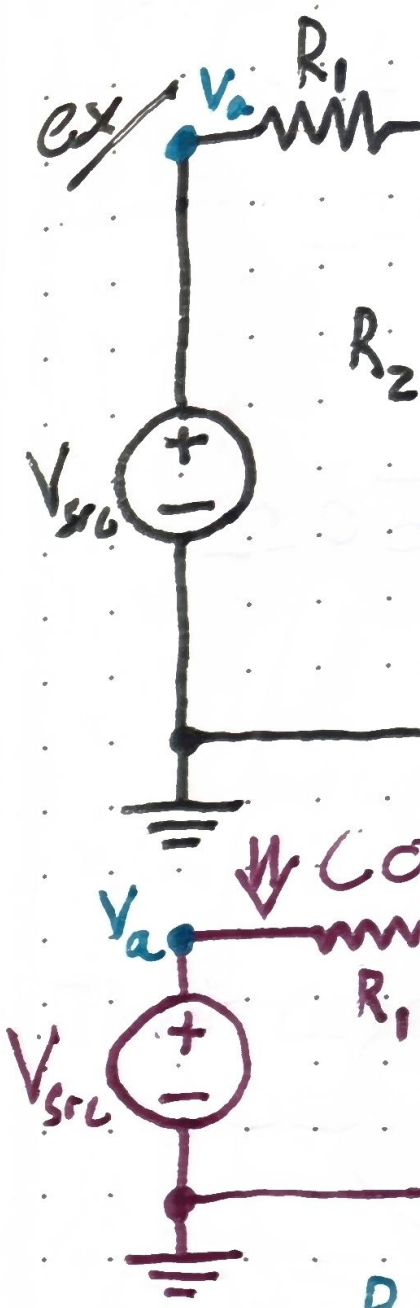

$V_b = \frac{R_b}{R_1 + R_b}$

Step 1 !

⇓ Expan

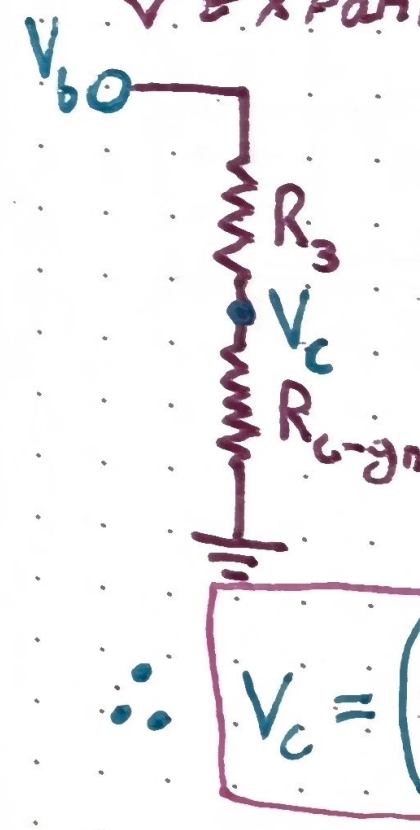

$\therefore V_c = ($

ex/

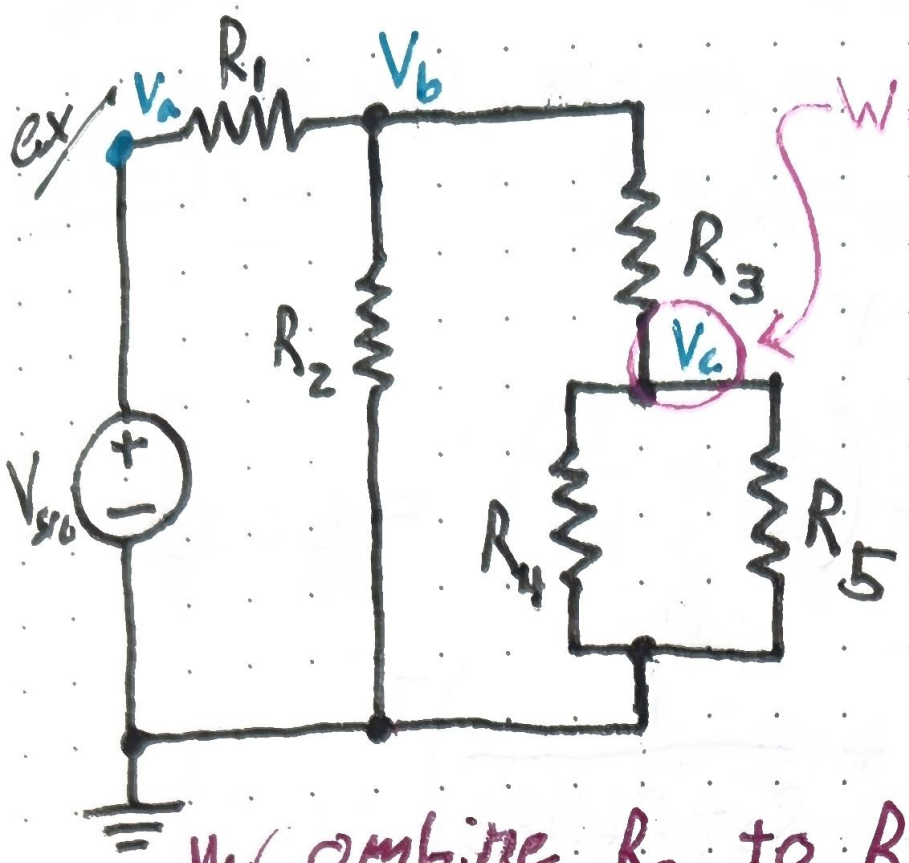

Want to find V_c

Step 1) Find V_b w/ Volt div. combining R_2 to R_5

Step 2) Find V_c w/ Volt div. combining R_4 and R_5

⇓ Combine R_2 to R_5:

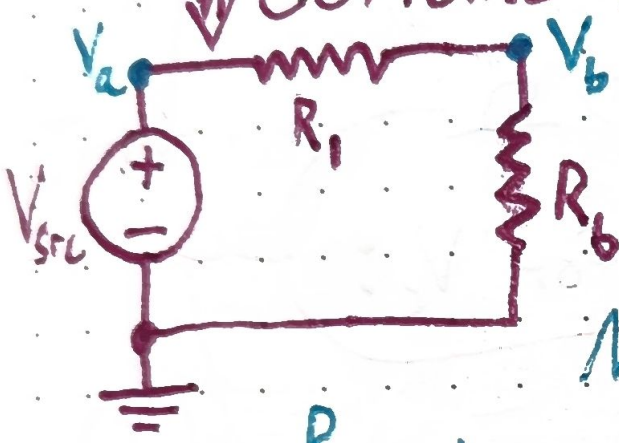

$$R_{b\text{-}gnd} = R_2 \parallel (R_3 + R_4 \parallel R_5)$$

Now Use Voltage division:

$$V_b = \frac{R_{b\text{-}gnd}}{R_1 + R_{b\text{-}gnd}} V_{src} \Rightarrow V_b = \frac{R_2 \parallel (R_3 + R_4 \parallel R_5)}{R_1 + R_2 \parallel (R_3 + R_4 \parallel R_5)} V_{src}$$

Step 1 Done ✓

⇓ Expand $R_{b\text{-}gnd}$ below V_b: $R_{c\text{-}gnd} = R_4 \parallel R_5$

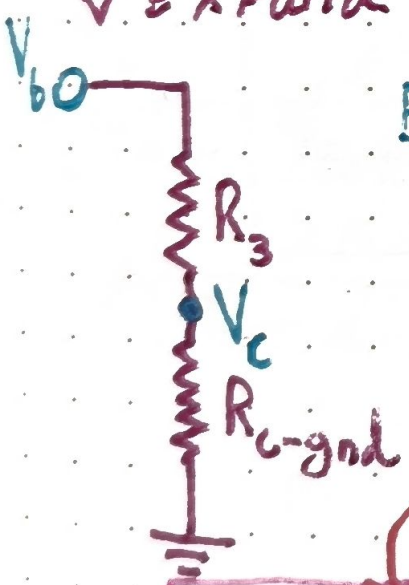

By Voltage division:

$$V_c = \frac{R_{c\text{-}gnd}}{R_3 + R_{c\text{-}gnd}} V_b \Rightarrow V_c = \frac{R_4 \parallel R_5}{R_3 + R_4 \parallel R_5} V_b$$

Step 2 Done ✓

Now Combine equations:

$$\therefore \boxed{V_c = \left(\frac{R_4 \parallel R_5}{R_3 + R_4 \parallel R_5}\right)\left(\frac{R_2 \parallel (R_3 + R_4 \parallel R_5)}{R_1 + R_2 \parallel (R_3 + R_4 \parallel R_5)}\right) V_{src}}$$

let's plug in some numbers for this example: $R_1 = R_2 = R_3 = R_4 = R_5 = 100\,\Omega$

and $V_{src} = 10\ V$

$$\Rightarrow R_4 \| R_5 = \left(\frac{1}{R_4} + \frac{1}{R_5}\right)^{-1} = \left(\frac{1}{100} + \frac{1}{100}\right)^{-1} = 50\,\Omega$$

$$\Rightarrow R_2 \| (R_3 + R_4 \| R_5) = \left(\frac{1}{R_2} + \frac{1}{R_3 + R_4 \| R_5}\right)^{-1}$$

$$= \left(\frac{1}{100} + \frac{1}{100+50}\right)^{-1} = 60\,\Omega$$

Now plug in to equation for V_c:

$$V_c = \left(\frac{50}{100+50}\right)\left(\frac{60}{100+60}\right) 10$$

R_3 R_1 V_{src}

$$\therefore \boxed{V_c = 1.25\ V}$$

Potention

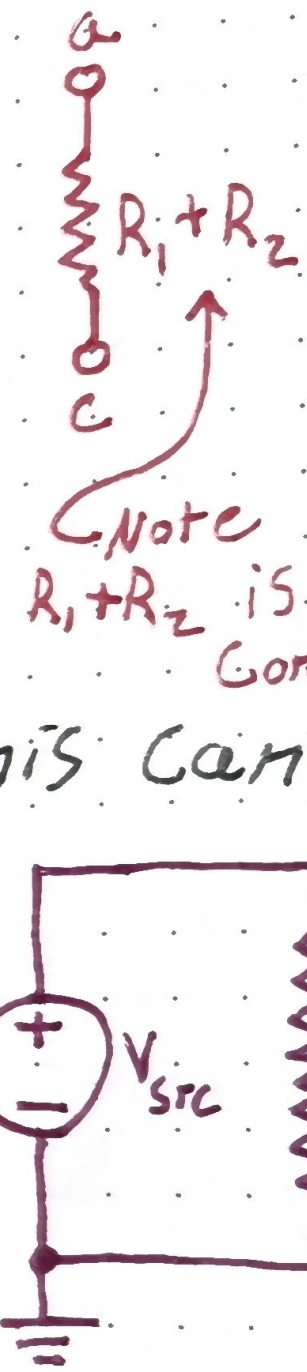

This Cam

$\therefore$ V_P

Potentiometer:

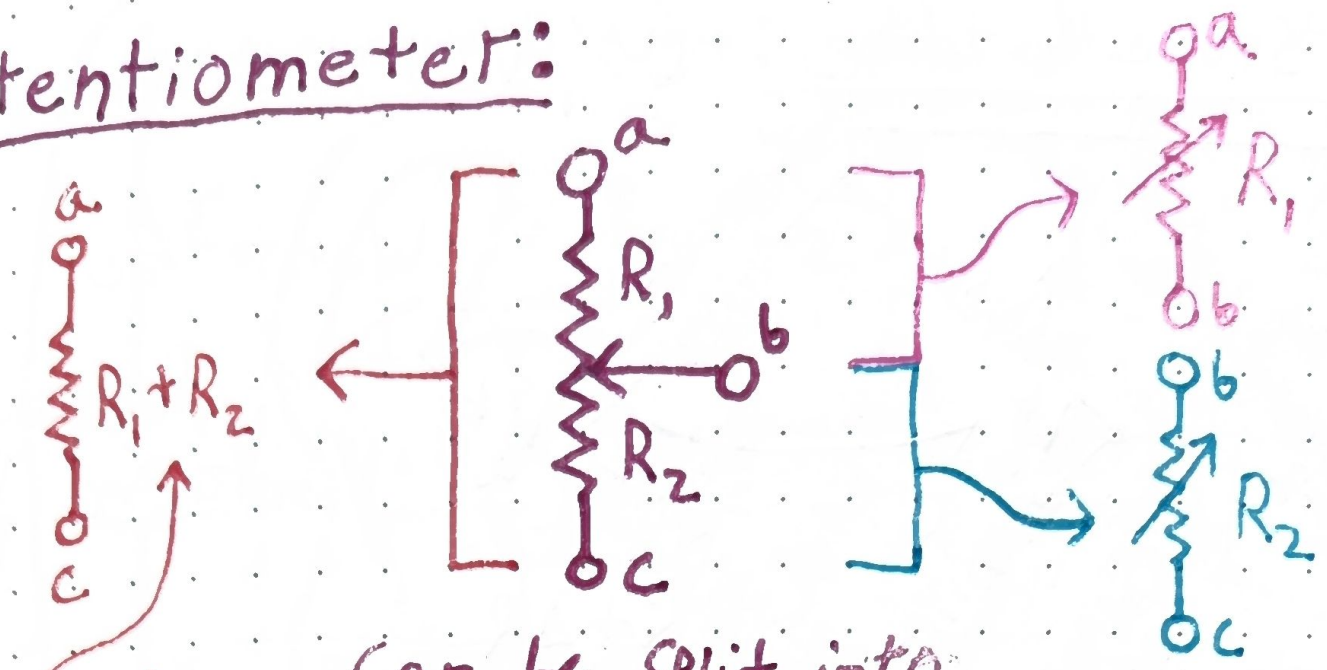

Note $R_1 + R_2$ is constant

Can be split into 3 diagrams w/ 2 connections

This can be used as a voltage div.:

where $R_1 + R_2 = R_{pot}$ (which is constant)

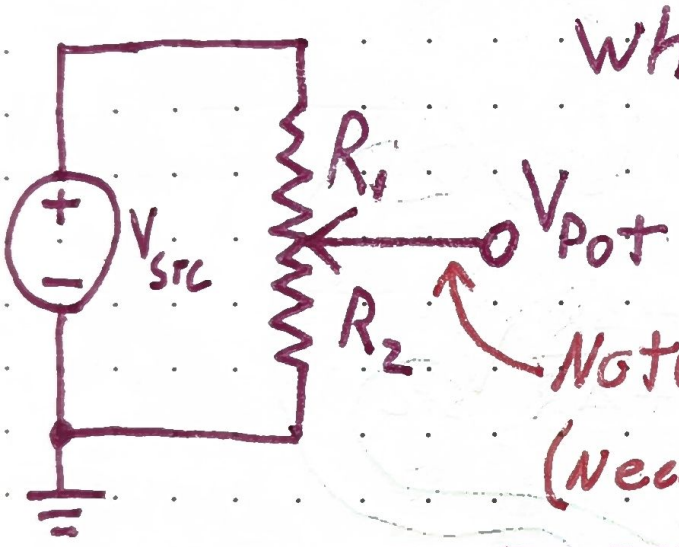

Note! No current in this wire! (needed to use volt div.)

$$\therefore \boxed{V_{pot} = \frac{R_2}{R_1 + R_2} V_{src} = \frac{R_2}{R_{pot}} V_{src}}$$

Wheatstone bridge: (w/ Volt Meter)

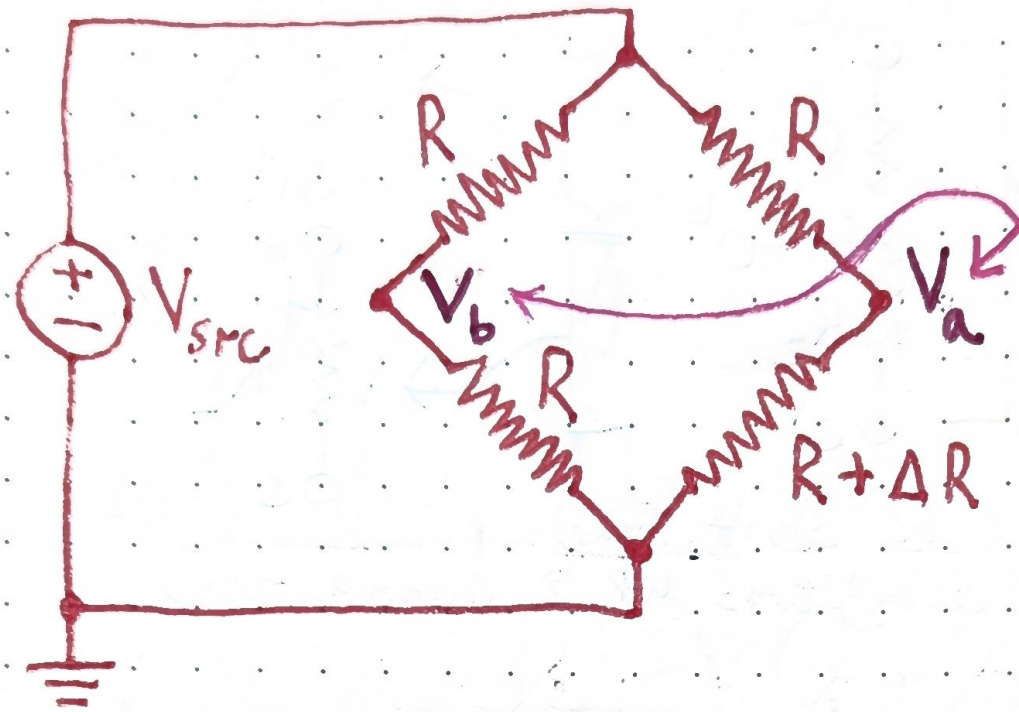

Want to find Balance Voltage V_{ab}

Use Voltage division:

$$V_a = \frac{R}{R+R} V_{src} \Rightarrow V_a = V_{src}/2$$

$$V_b = \frac{R+\Delta R}{R+(R+\Delta R)} V_{src} = \frac{R+\Delta R}{2R+\Delta R} V_{src}$$

Balance Voltage V_{ab}:

$$V_{ab} = V_a - V_b = \left(\frac{R+\Delta R}{2R-\Delta R} - \frac{1}{2}\right) V_{src}$$

$$= \left(\frac{R+\Delta R}{2R+\Delta R} - \frac{R+\Delta R/2}{2(R+\Delta R/2)}\right) V_{src} = \left(\frac{\Delta R/2}{2R+\Delta R}\right) V_{src}$$

$$\therefore \boxed{V_{ab} = \frac{\Delta R}{4R+2\Delta R} V_{src}}$$

If $\Delta R/R \ll 1$

$$\Rightarrow \boxed{V_{ab} \approx \frac{V_{src}}{4}\left(\frac{\Delta R}{R}\right)}$$

a+b

Node

→ A

→ (

→ (

* A