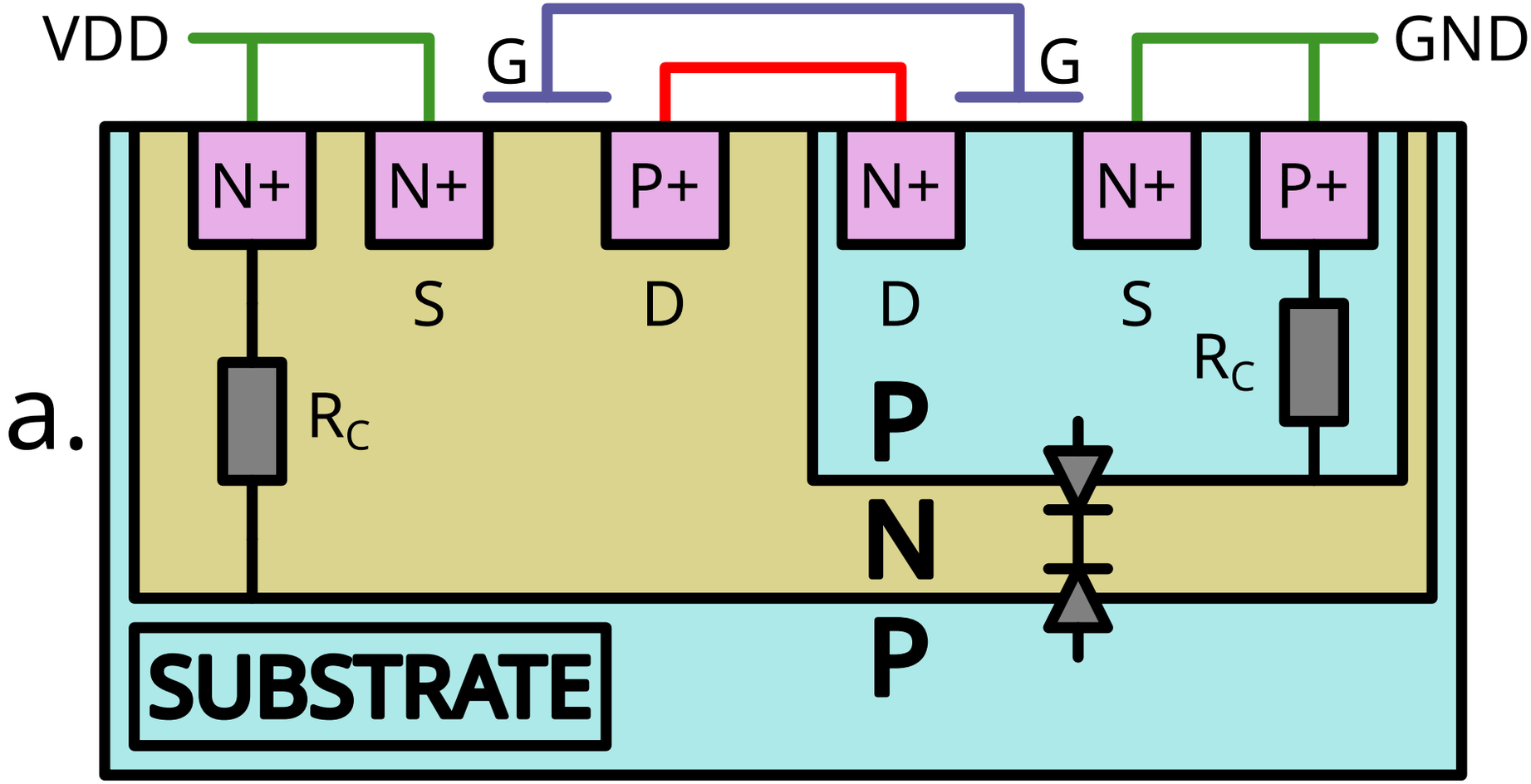
a.
VDD
G
G
GND
N+
N+
P+
N+
N+
P+
S
D
D
S
R_C
R_C
P
N
P
SUBSTRATE

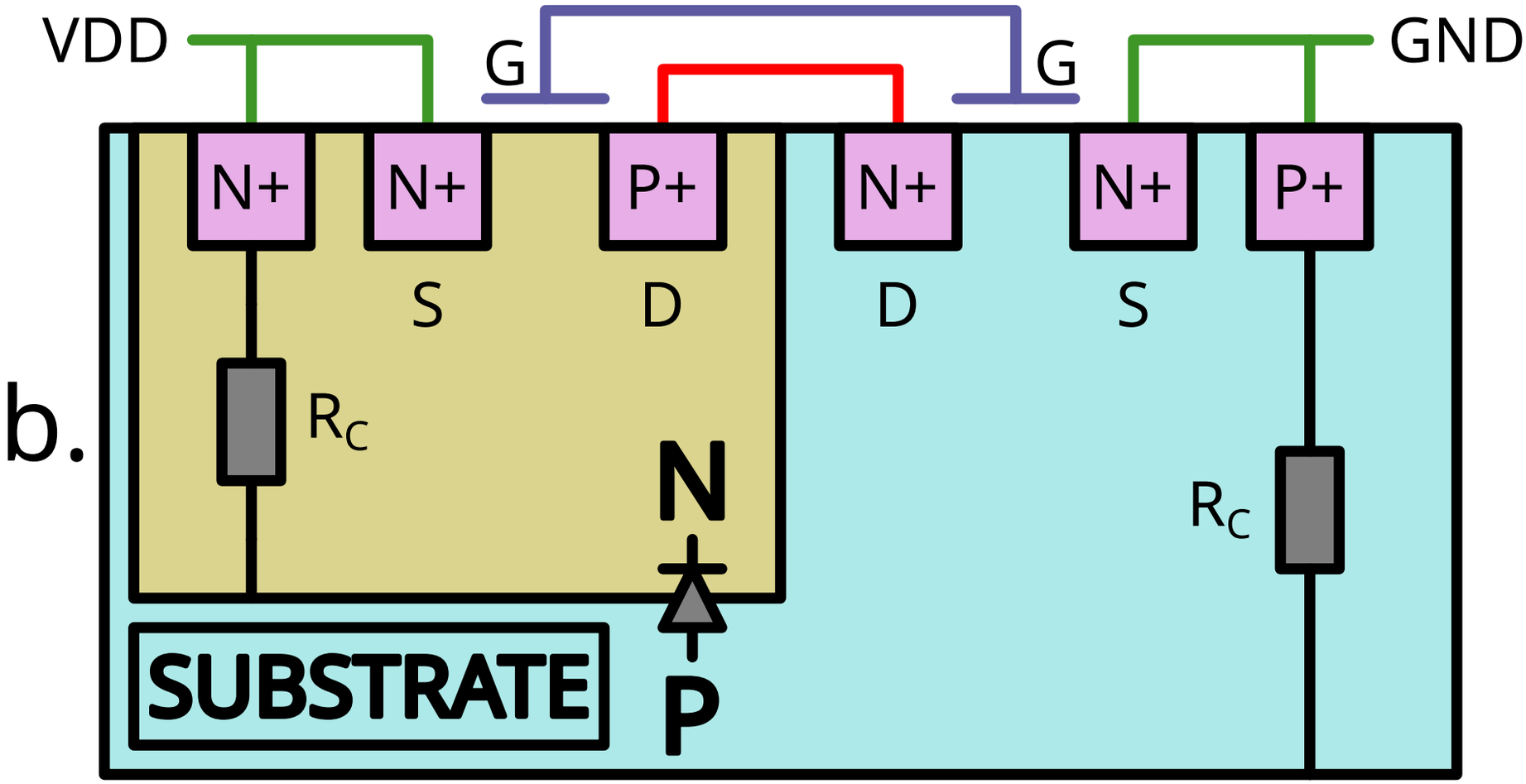
b.
VDD
G
G
GND
N+
N+
P+
N+
N+
P+
S
D
D
S
R_C
R_C
N
P
SUBSTRATE