1. $F_1 = \Sigma(m_0, m_1, m_6) = \overline{\overline{m_0}\,\overline{m_1}\,\overline{m_6}}$

$F_2 = \Sigma(m_0, m_1, m_2, m_3, m_6, m_7) = \overline{\overline{m_0}\,\overline{m_1}\,\overline{m_2}\,\overline{m_3}\,\overline{m_6}\,\overline{m_7}}$

$F_3 = \Sigma(m_0, m_1, m_6, m_7) = \overline{\overline{m_0}\,\overline{m_1}\,\overline{m_6}\,\overline{m_7}}$

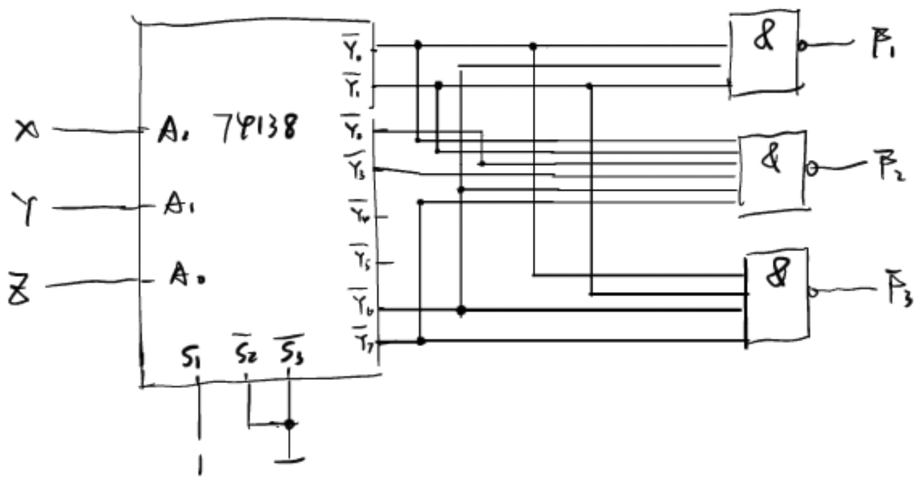

2. $F = AB + A\overline{B} = A$

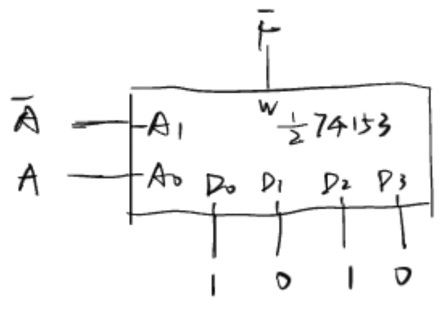

3.

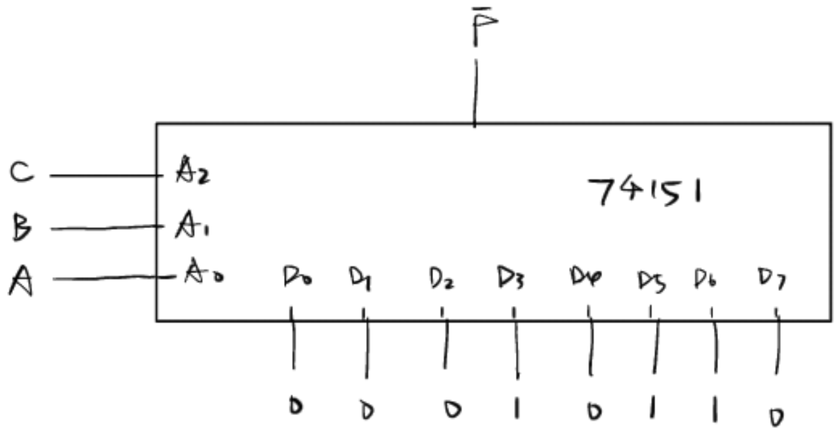

$F = AB + BC + AC$

4 输出方程：$Z = \overline{Q_2^n} + Q_1^n$

激励方程：$\begin{cases} D_1 = \overline{Q_1^n} + Q_2^n \\ D_2 = X\,\overline{Q_2^n} \end{cases}$

次态方程：$\begin{cases} Q_1^{n+1} = \overline{Q_1^n} + Q_2^n \\ Q_2^{n+1} = X\,\overline{Q_2^n} \end{cases}$

状态表：

输入	现态		次态		输出
X	Q_1^n	Q_2^n	Q_1^{n+1}	Q_2^{n+1}	Z
0	0	0	1	0	1
0	0	1	1	0	0
0	1	0	0	0	1
0	1	1	1	0	1
1	0	0	1	1	1
1	0	1	1	0	
1	1	0	0	1	1
1	1	1	1	0	1

状态图

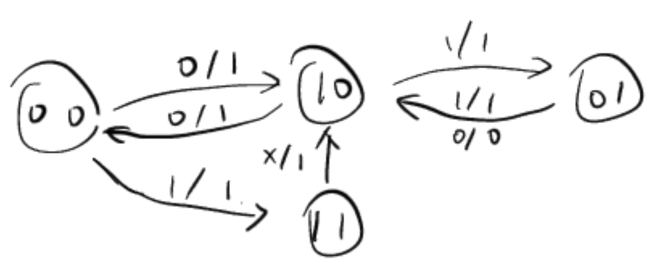

5.

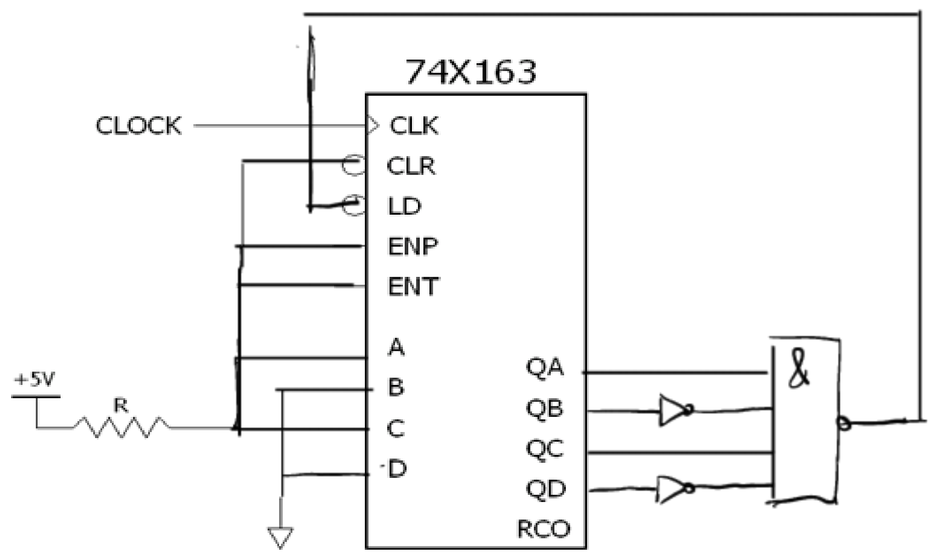

6. 以四位奇偶校验器为例，

$P = A \oplus B \oplus C \oplus D$ ，P为1时说明1的个数为奇数

7. moore逻辑：定义状态 S0(00)：未检测到有效片段

S1(01)，检测到1个1

S2(10)，检测到10

S3(11)，检测到101

状态图为

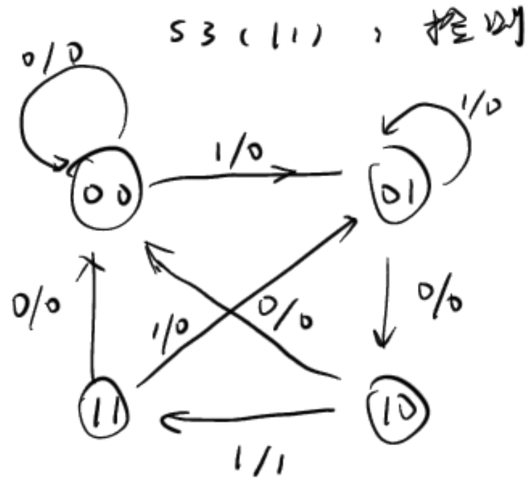

$\therefore Q_1^{n+1} = \overline{Q_1^n} Q_0^n \overline{X} + Q_1^n \overline{Q_0^n} \overline{X}$

$Q_0^{n+1} = X$

$Z = Q_1^n Q_0^n$

mealy逻辑：S0(00)：未检测到有效片段

S1(01)，检测到1个1

S2(10)，检测到10

状态机，

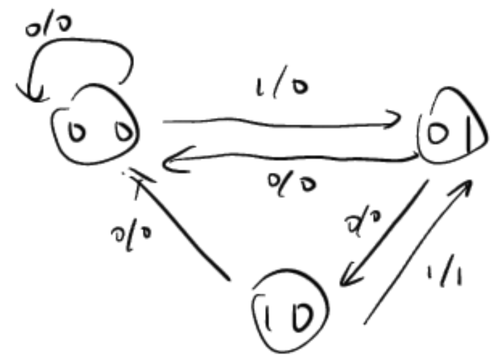

$\therefore Q_1^{n+1} = \overline{Q_1^n} Q_0^n \overline{X}$

$Q_2^{n+1} = \overline{Q_1^n} X + Q_1^n \overline{Q_0^n} X$

$Z = Q_1 \overline{Q_0} X$
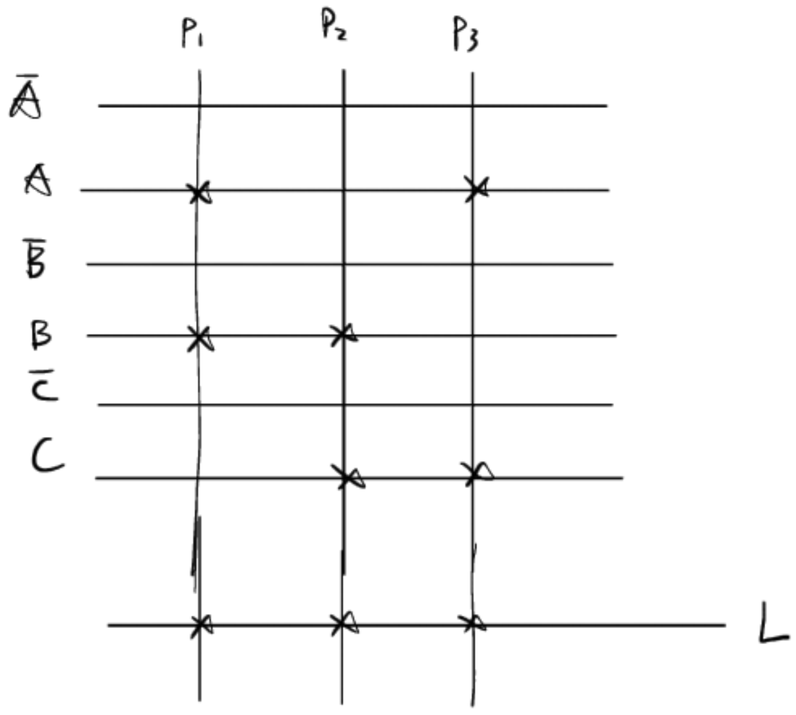
8. $P_1 = AB$, $P_2 = BC$, $P_3 = AC$