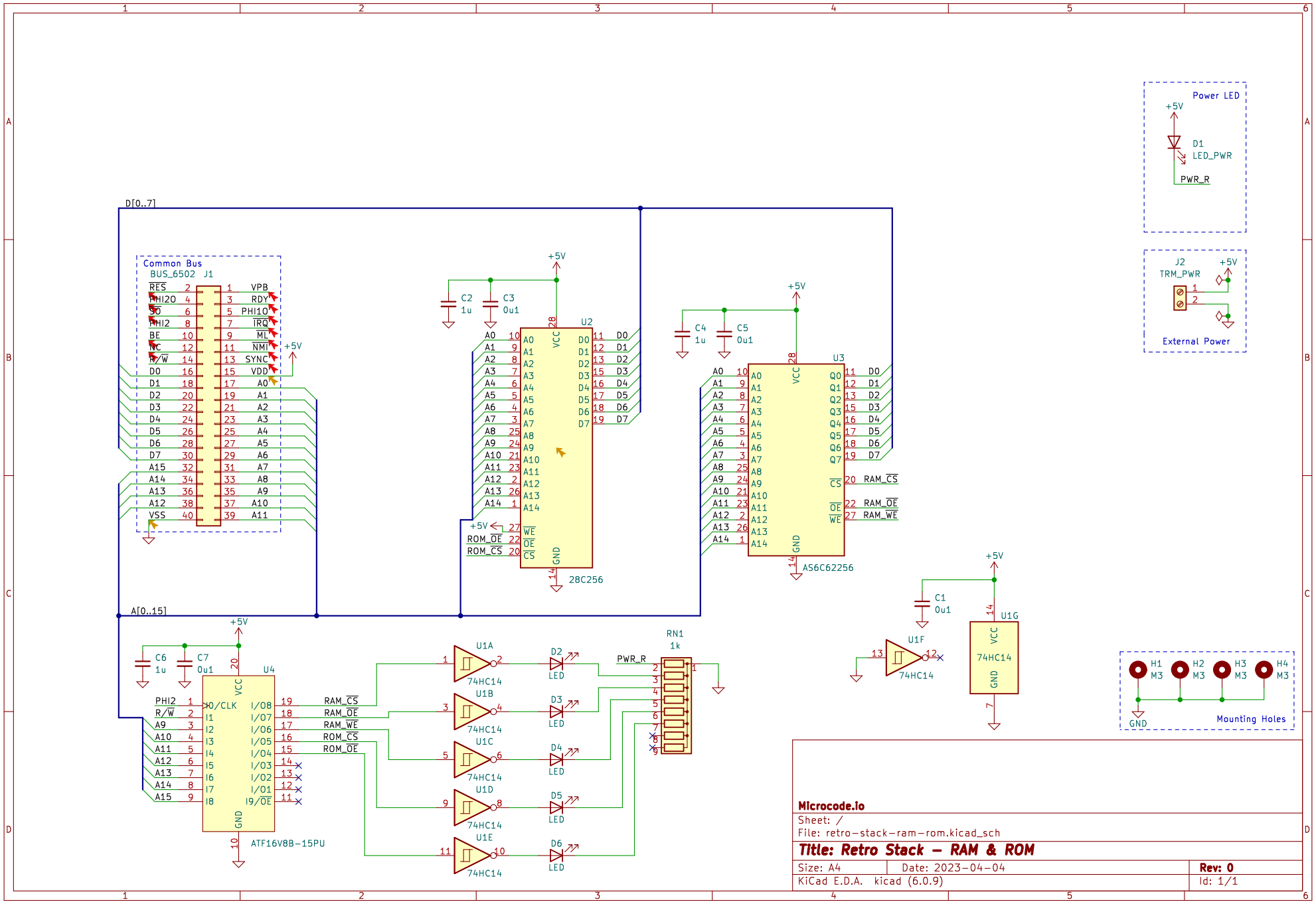
Common Bus
BUS_6502 J1
D[0..7]
A[0..15]
U2
28C256
U3
AS6C62256
U4
ATF16V8B-15PU
U1A
U1B
U1C
U1D
U1E
U1F
U1G
74HC14
RN1
1k
D1
LED_PWR
PWR_R
Power LED
J2
TRM_PWR
External Power
H1 M3
H2 M3
H3 M3
H4 M3
Mounting Holes
Microcode.io
Sheet: /
File: retro-stack-ram-rom.kicad_sch
Title: Retro Stack - RAM & ROM
Size: A4
Date: 2023-04-04
Rev: 0
KiCad E.D.A. kicad (6.0.9)
Id: 1/1