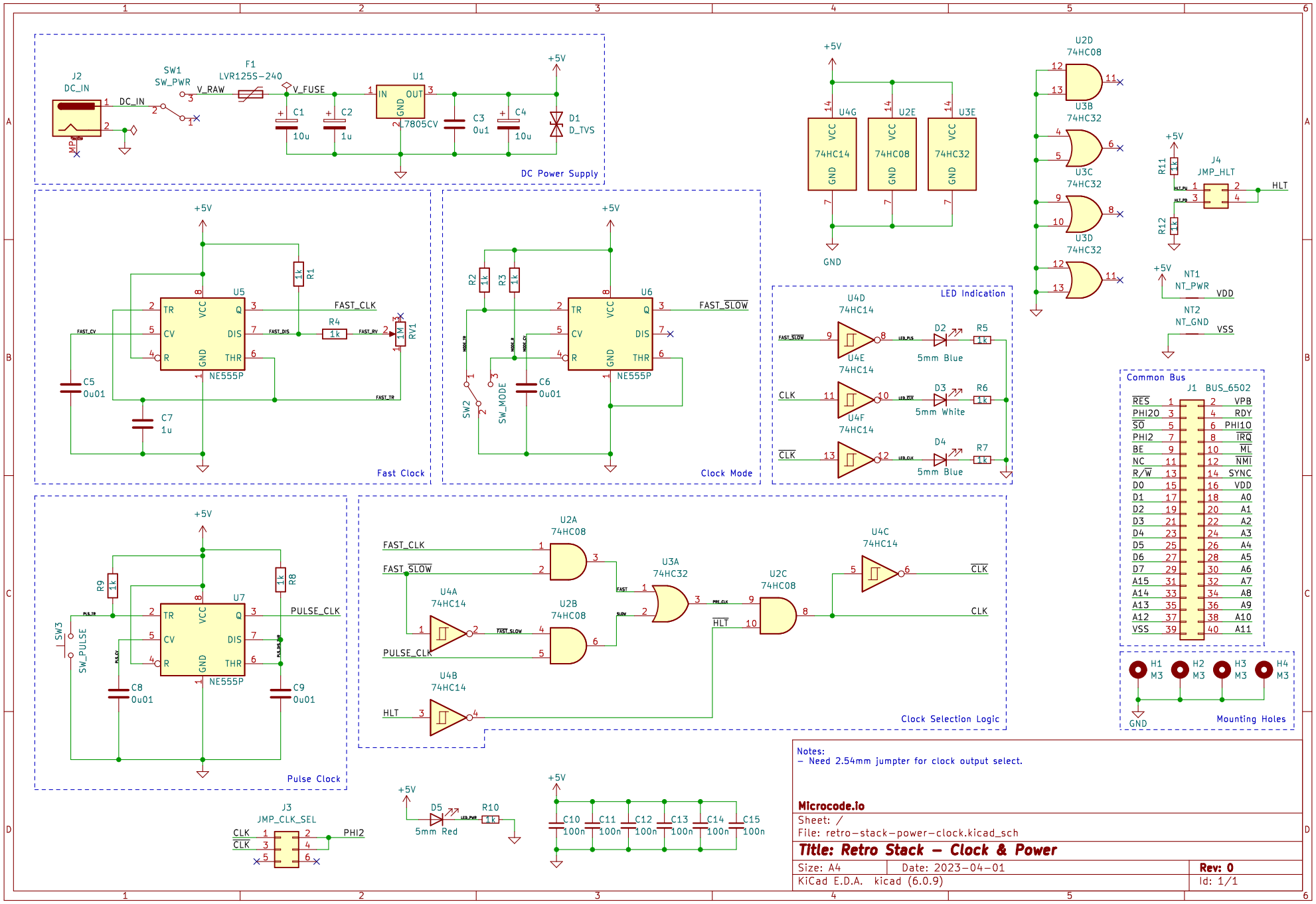
DC Power Supply
J2
DC_IN
SW1
SW_PWR
F1
LVR125S-240
V_RAW
V_FUSE
U1
7805CV
C1
10u
C2
1u
C3
0u1
C4
10u
D1
D_TVS
+5V
Fast Clock
U5
NE555P
FAST_CLK
R4
1k
RV1
1M
R1
1k
C5
0u01
C7
1u
Clock Mode
U6
NE555P
FAST_SLOW
R2
1k
R3
1k
C6
0u01
SW2
SW_MODE
U4G
U2E
U3E
74HC14
74HC08
74HC32
GND
U2D
74HC08
U3B
74HC32
U3C
74HC32
U3D
74HC32
R11
1k
R12
1k
J4
JMP_HLT
HLT
NT1
NT_PWR
VDD
NT2
NT_GND
VSS
LED Indication
U4D
74HC14
U4E
74HC14
U4F
74HC14
D2
5mm Blue
D3
5mm White
D4
5mm Blue
R5
1k
R6
1k
R7
1k
CLK
Common Bus
J1
BUS_6502
RES
PHI2O
SO
PHI2
BE
NC
R/W
D0
D1
D2
D3
D4
D5
D6
D7
A15
A14
A13
A12
VSS
VPB
RDY
PHI1O
IRQ
ML
NMI
SYNC
VDD
A0
A1
A2
A3
A4
A5
A6
A7
A8
A9
A10
A11
Mounting Holes
H1 M3
H2 M3
H3 M3
H4 M3
Pulse Clock
U7
NE555P
PULSE_CLK
R9
1k
R8
1k
SW3
SW_PULSE
C8
0u01
C9
0u01
Clock Selection Logic
U2A
74HC08
U2B
74HC08
U3A
74HC32
U2C
74HC08
U4C
74HC14
U4A
74HC14
U4B
74HC14
FAST_CLK
FAST_SLOW
PULSE_CLK
HLT
J3
JMP_CLK_SEL
PHI2
D5
5mm Red
R10
1k
C10
100n
C11
100n
C12
100n
C13
100n
C14
100n
C15
100n
Notes:
– Need 2.54mm jumpter for clock output select.
Microcode.io
Sheet: /
File: retro-stack-power-clock.kicad_sch
Title: Retro Stack – Clock & Power
Size: A4
Date: 2023-04-01
Rev: 0
KiCad E.D.A. kicad (6.0.9)
Id: 1/1