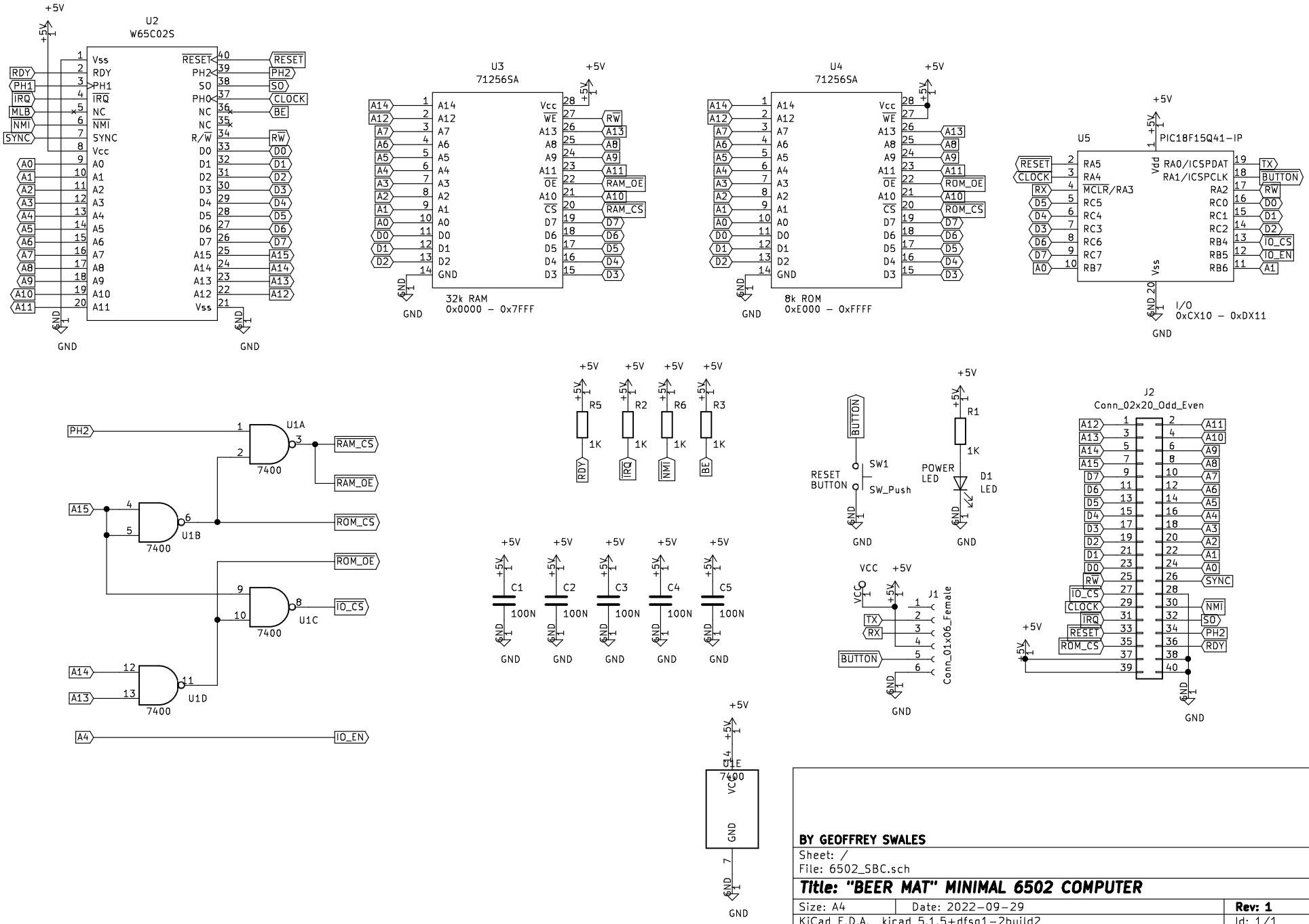
U2
W65C02S
U3
71256SA
32k RAM
0x0000 – 0x7FFF
U4
71256SA
8k ROM
0xE000 – 0xFFFF
U5
PIC18F15Q41-IP
I/O
0xCX10 – 0xDX11
U1A
U1B
U1C
U1D
U1E
7400
R5
R2
R6
R3
R1
1K
C1
C2
C3
C4
C5
100N
SW1
RESET BUTTON
SW_Push
POWER LED
D1 LED
J1
Conn_01x06_Female
J2
Conn_02x20_Odd_Even
+5V
GND
VCC
BY GEOFFREY SWALES
Sheet: /
File: 6502_SBC.sch
Title: "BEER MAT" MINIMAL 6502 COMPUTER
Size: A4
Date: 2022-09-29
Rev: 1
KiCad E.D.A. kicad 5.1.5+dfsg1-2build2
Id: 1/1