X-A1
1 1
Z
2 J
Domek
1
X-A2
1 1
Z
2 J
Domek
1
X-A3
1 1
Z
2 J
Domek
1
X-A4
1 1
Z
2 J
Domek
1
X-A5
1 1
GZ
1 J
Domek
1
X-A6
1 1
GZ
1 J
Domek
1
X-A7
1 1
GZ
1 J
Domek
1
X-A8
1 1
GZ
1 J
Domek
1
X-A9
1 1
GZ
2 J
Domek
1
X-A10
1 1
GZ
2 J
Domek
1
X-A11
1 1
GZ
2 J
Domek
1
X-A12
1 1
GZ
2 J
Domek
1
X-A13
1 0
B
0 V
Kram
1
X-B1
1 0
B
0 V
Kram
1
X-B2
2 0
S
0 V
Kram
1
X-B3
2 0
S
0 V
Kram
1
X-B4
0 1
x
1 Z
Policie
1
X-B5
1 1
G
1 Z
Policie
1
X-B6
0 2
x
1 V
Lekarna
0
X-B7
0 2
x
1 V
Lekarna
0
X-B8
0 2
x
1 V
Lekarna
0
X-B9
0 2
x
2 M
Garaze
1
X-B10
0 2
x
2 M
Garaze
1
X-B11
0 2
G
1 M
Garaze
2
X-B12
0 2
G
1 M
Garaze
2
X-B13
1 2
S
2 M
Sklad
2
X-C1
1 2
S
2 M
Sklad
2
X-C2
2 2
SG
1 M
Sklad
2
X-C3
2 2
SG
1 M
Sklad
2
X-C4
1 2
B
2 M
Firma
1

X-C5
1 2
B
2 M
Firma
1
X-C6
1 2
BS
1 M
Firma
2
X-C7
1 2
BS
1 M
Firma
2
X-C8
2 2
BG
1 M
Firma
2
X-C9
2 2
BG
1 M
Firma
2
X-C10
1 3
Z
0 x
Park
2
X-C11
1 3
Z
0 x
Park
2
X-C12
1 3
Z
0 x
Park
2
X-C13
1 3
Z
0 x
Park
2
X-D1
1 1
x
0 x
Krizovatka
2
X-D2
1 1
x
0 x
Krizovatka
2
Y-A1
0 1
x
0 V
Garaz
1
Y-A2
0 1
x
0 V
Garaz
1
Y-A3
0 1
x
0 V
Garaz
1
Y-A4
0 1
x
0 V
Garaz
1
Y-A5
0 1
x
0 V
Garaz
1
Y-A6
0 1
x
1 V
Garaz
1
Y-A7
0 1
x
1 V
Garaz
1
Y-A8
0 1
x
1 V
Garaz
1
Y-A9
0 1
x
1 V
Garaz
1
Y-A10
0 1
x
1 V
Garaz
1
Y-A11
1 1
x
1 V
Garaz
1
Y-A12
1 1
x
1 V
Garaz
1
Y-A13
1 1
x
1 V
Garaz
1
Y-B1
1 1
x
1 V
Garaz
1
Y-B2
1 1
x
1 V
Garaz
1
Y-B3
1 2
x
0 M
Sklad
1
Y-B4
1 2
x
0 M
Sklad
1
Y-B5
1 2
x
0 M
Sklad
1
Y-B6
1 2
x
1 M
Sklad
0

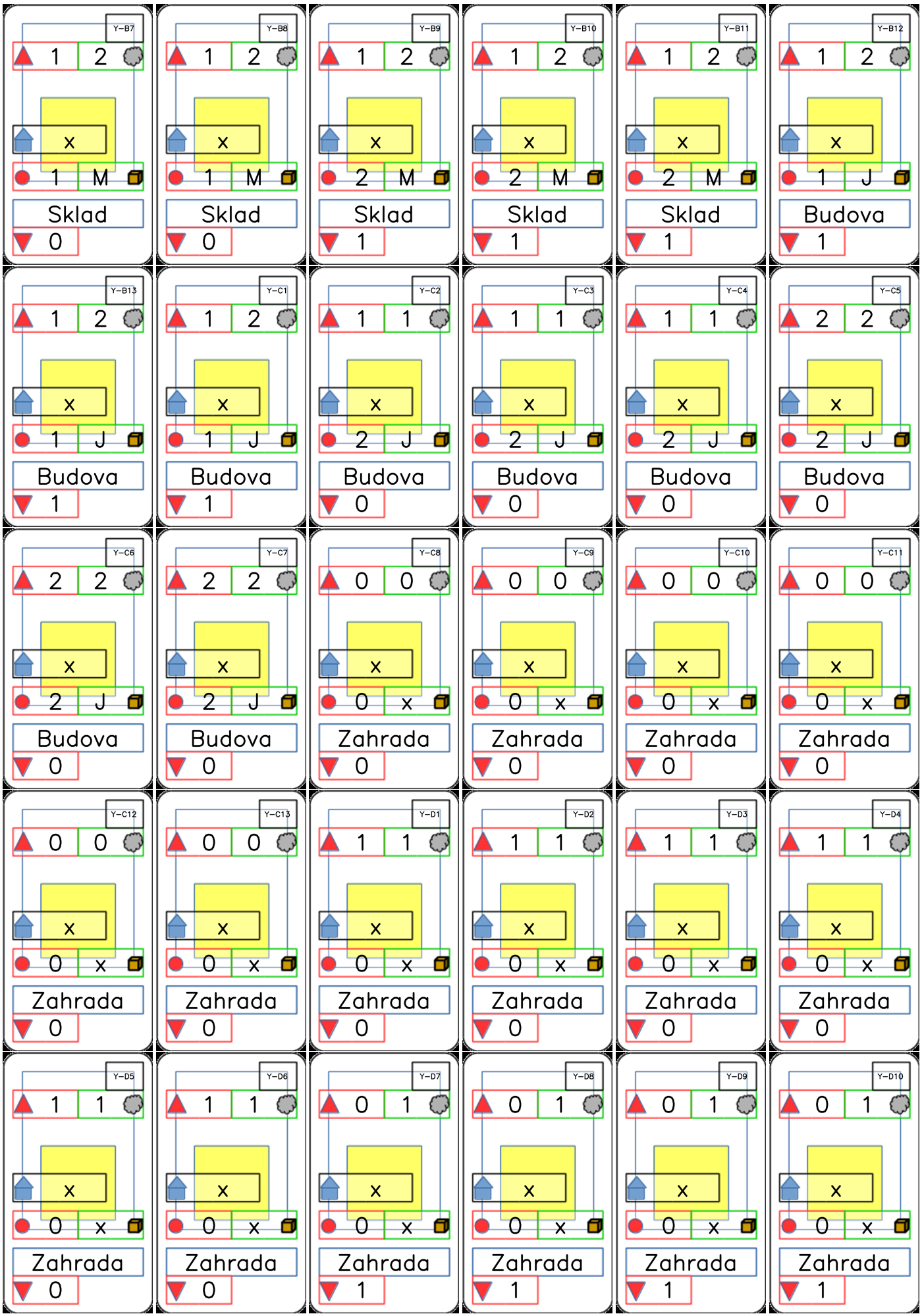
Y-B7 1 2 x 1 M Sklad 0
Y-B8 1 2 x 1 M Sklad 0
Y-B9 1 2 x 2 M Sklad 1
Y-B10 1 2 x 2 M Sklad 1
Y-B11 1 2 x 2 M Sklad 1
Y-B12 1 2 x 1 J Budova 1
Y-B13 1 2 x 1 J Budova 1
Y-C1 1 2 x 1 J Budova 1
Y-C2 1 1 x 2 J Budova 0
Y-C3 1 1 x 2 J Budova 0
Y-C4 1 1 x 2 J Budova 0
Y-C5 2 2 x 2 J Budova 0
Y-C6 2 2 x 2 J Budova 0
Y-C7 2 2 x 2 J Budova 0
Y-C8 0 0 x 0 x Zahrada 0
Y-C9 0 0 x 0 x Zahrada 0
Y-C10 0 0 x 0 x Zahrada 0
Y-C11 0 0 x 0 x Zahrada 0
Y-C12 0 0 x 0 x Zahrada 0
Y-C13 0 0 x 0 x Zahrada 0
Y-D1 1 1 x 0 x Zahrada 0
Y-D2 1 1 x 0 x Zahrada 0
Y-D3 1 1 x 0 x Zahrada 0
Y-D4 1 1 x 0 x Zahrada 0
Y-D5 1 1 x 0 x Zahrada 0
Y-D6 1 1 x 0 x Zahrada 0
Y-D7 0 1 x 0 x Zahrada 1
Y-D8 0 1 x 0 x Zahrada 1
Y-D9 0 1 x 0 x Zahrada 1
Y-D10 0 1 x 0 x Zahrada 1

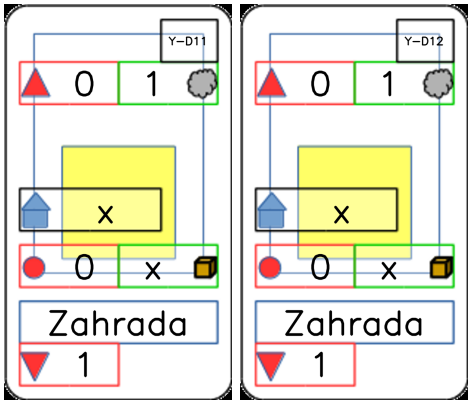
Y-D11
0
1
x
0
x
Zahrada
1
Y-D12
0
1
x
0
x
Zahrada
1