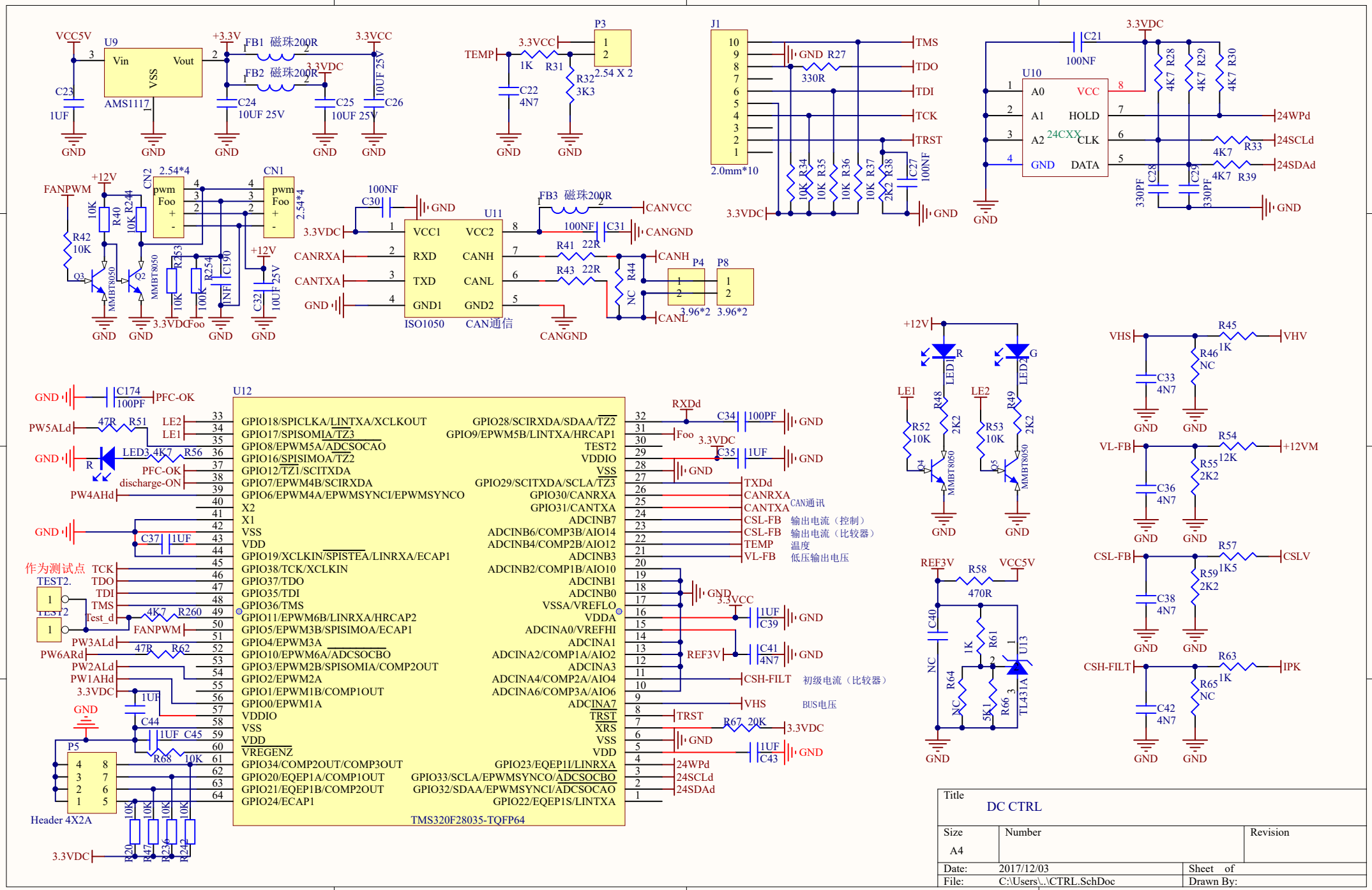


| | | |
|---|---|---|
| Title | DC CTRL | |
| Size A4 | Number | Revision |
| Date: 2017/12/03 | | Sheet of |
| File: C:\Users\..\CTRL.SchDoc | | Drawn By: |