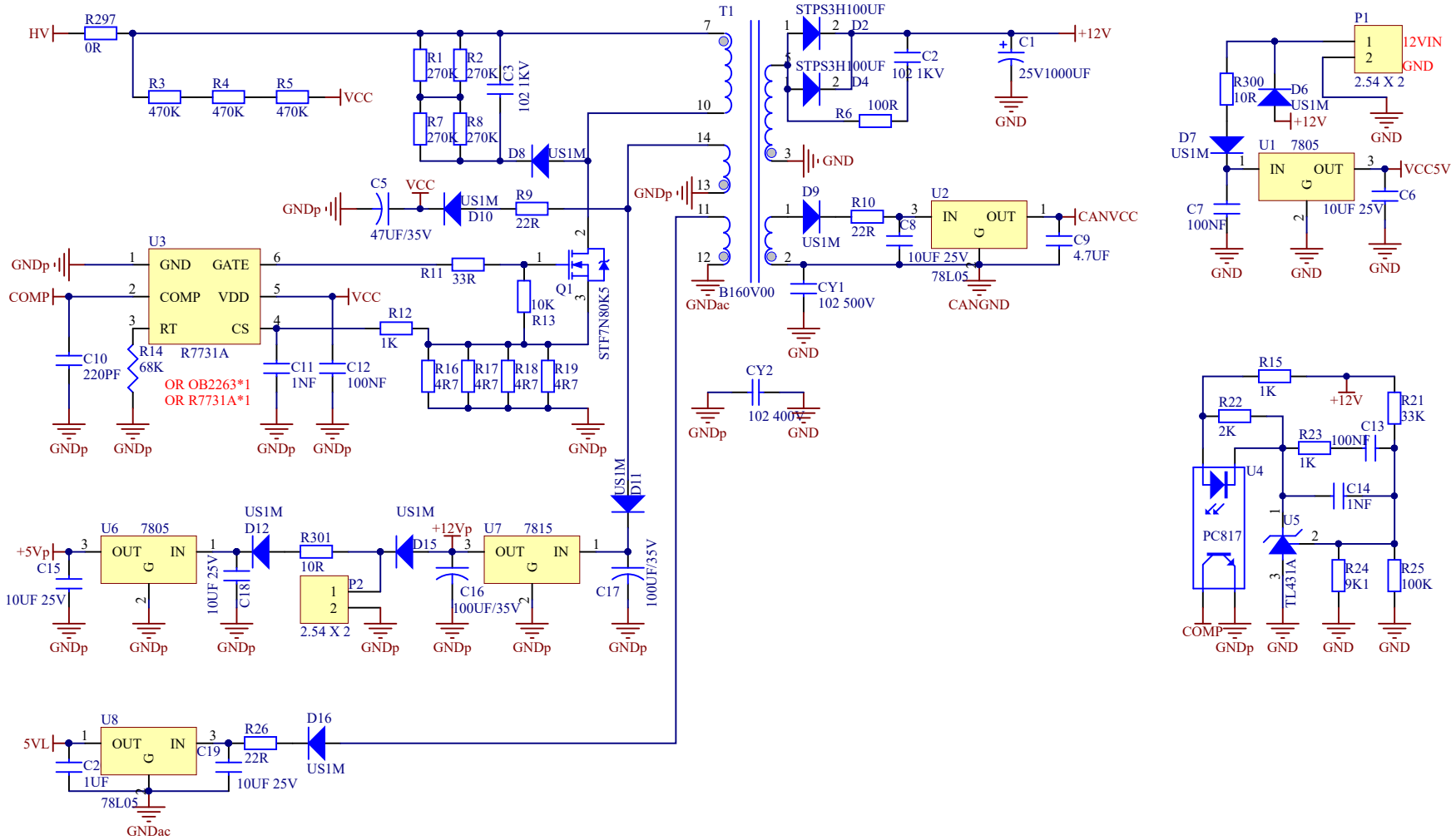

Title 辅助电源		
Size A4	Number	Revision
Date: 2017/12/03		Sheet of
File: C:\Users\..\AUX-power-V1.SchDoc		Drawn By: