NO	Part Name	Material	Plating	Remark
①	Housing	Nylon 66		UL – 94 V0
②	Conductor	Brass (0.6t)	Sn	C2680R-1/2
③	Contacting Plate	Stainless Steel		SUS 304
④	Spring	Stainless Steel		SUS 304
⑤	Button	Nylon 66		UL – 94 V0
⑥	End Cover	Nylon 66		UL – 94 V0

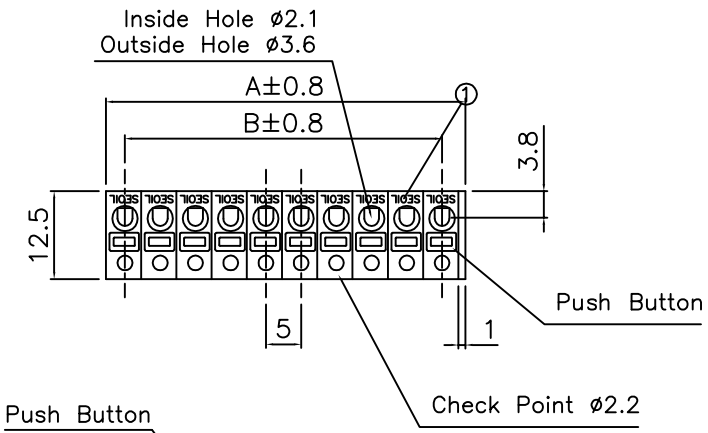

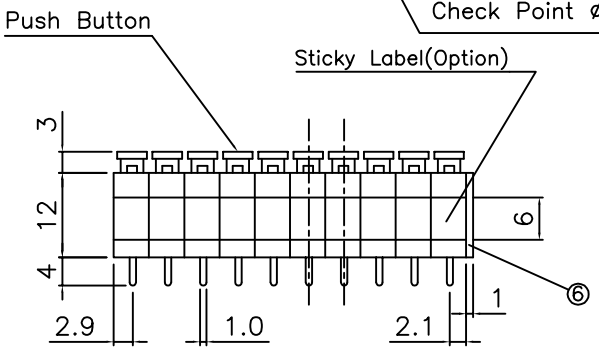

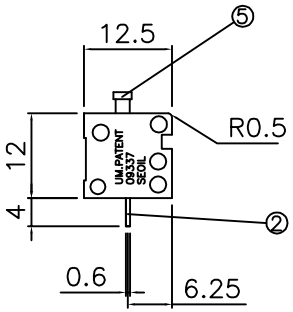

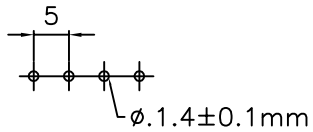

– P.C.B. Drilled Hole –

※ 모든 치수의 허용오차 : ±0.5mm
단, 전장길이 A와B는 예외(±0.8mm)로 한다.
A.W.G 24 – 16 (0.2mm² ~ 1.3mm²)Str.

Unit : mm

P	2	3	4	5	6	7	8	9	10	11	12	13	14	15	16	17	18	19	20	23
A	11	16	21	26	31	36	41	46	51	56	61	66	71	76	81	86	91	96	101	116
B	5	10	15	20	25	30	35	40	45	50	55	60	65	70	75	80	85	90	95	110

Electrical Rating	
Regularity	AC300V 7A
Voltage	AC2500V
Resistance	DC500V 500MΩ

No.	Details.	Date.	Chang.
	버튼 모양 변경	09/06/03	M.K.KO

Drawing.	DWG No. 080421R1
Design. G S Yoon	Scale. 1 : 1
Check. H S Yoon	Date. 2008/04/21

Type Name. USL–5VB1

SEOIL ELECTRONICS CO.,LTD
Solution for Contact Device