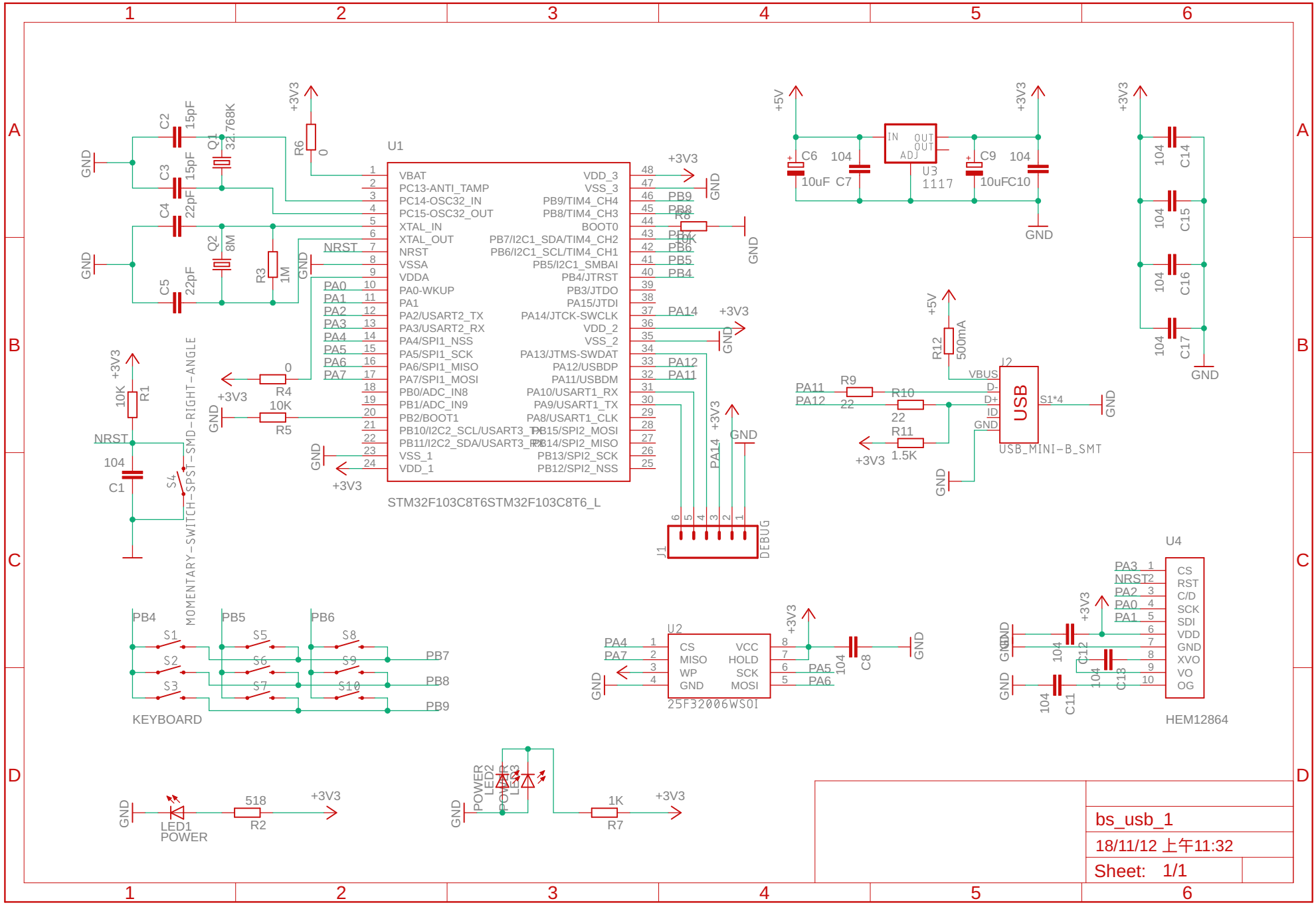
U1
STM32F103C8T6STM32F103C8T6_L
VBAT
PC13-ANTI_TAMP
PC14-OSC32_IN
PC15-OSC32_OUT
XTAL_IN
XTAL_OUT
NRST
VSSA
VDDA
PA0-WKUP
PA1
PA2/USART2_TX
PA3/USART2_RX
PA4/SPI1_NSS
PA5/SPI1_SCK
PA6/SPI1_MISO
PA7/SPI1_MOSI
PB0/ADC_IN8
PB1/ADC_IN9
PB2/BOOT1
PB10/I2C2_SCL/USART3_TX
PB11/I2C2_SDA/USART3_RX
VSS_1
VDD_1
VDD_3
VSS_3
PB9/TIM4_CH4
PB8/TIM4_CH3
BOOT0
PB7/I2C1_SDA/TIM4_CH2
PB6/I2C1_SCL/TIM4_CH1
PB5/I2C1_SMBAI
PB4/JTRST
PB3/JTDO
PA15/JTDI
PA14/JTCK-SWCLK
VDD_2
VSS_2
PA13/JTMS-SWDAT
PA12/USBDP
PA11/USBDM
PA10/USART1_RX
PA9/USART1_TX
PA8/USART1_CLK
PB15/SPI2_MOSI
PB14/SPI2_MISO
PB13/SPI2_SCK
PB12/SPI2_NSS
J1
DEBUG
U2
25F32006WSOI
CS
MISO
WP
GND
VCC
HOLD
SCK
MOSI
U3
1117
IN
OUT
ADJ
J2
USB
USB_MINI-B_SMT
VBUS
D-
D+
ID
S1*4
U4
HEM12864
CS
RST
C/D
SCK
SDI
VDD
GND
XVO
VO
OG
KEYBOARD
MOMENTARY-SWITCH-SPST-SMD-RIGHT-ANGLE
LED1
POWER
LED2
LED3
+3V3
+5V
GND
NRST
PA0
PA1
PA2
PA3
PA4
PA5
PA6
PA7
PA11
PA12
PA14
PB4
PB5
PB6
PB7
PB8
PB9
Q1 32.768K
Q2 8M
R1 10K
R2 518
R3 1M
R4 0
R5 10K
R6 0
R7 1K
R8 10K
R9 22
R10 22
R11 1.5K
R12 500mA
C1 104
C2 15pF
C3 15pF
C4 22pF
C5 22pF
C6 10uF
C7 104
C8 104
C9 10uF
C10 104
C11 104
C12 104
C13 104
C14 104
C15 104
C16 104
C17 104
S1
S2
S3
S4
S5
S6
S7
S8
S9
S10
bs_usb_1
18/11/12 上午11:32
Sheet: 1/1