VERSION HISTORY

Revision	Description	Date	Drawn	Checked	Approved
Ver 2.0	Release Version	2020-12-4			

Index:

P01 VERSION HISTORY
P02 BLOCK DIAGRAM
P03 POWER TREE
P04 GPIO ASSIGNMENT
P05 POWER1
P06 POWER2
P07 SOC
P08 FLASH
P09 LCD
P10 AUDIO
P11 CARD USB
P12 WIFI
P13 TV IR KEY TWI URAT JTAG

BLOCK

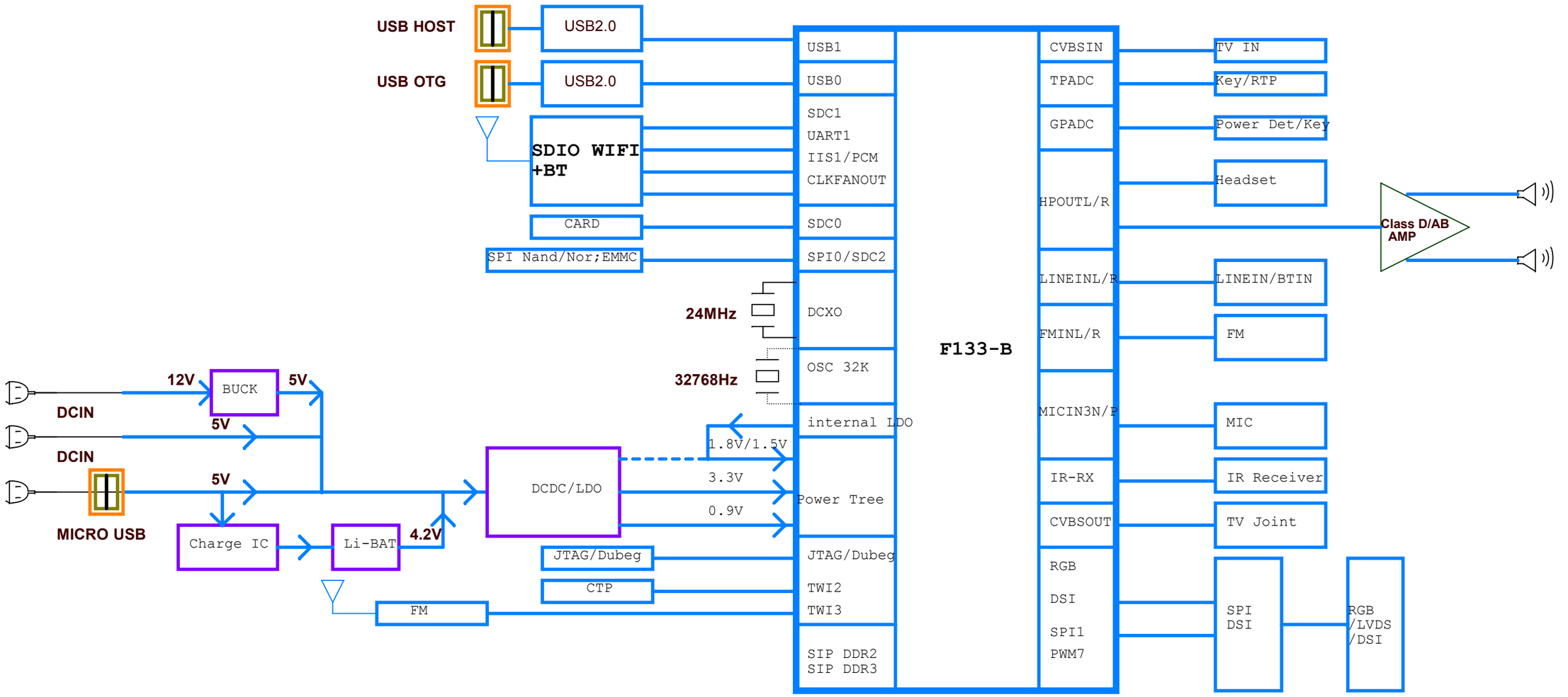

AllWinner Technology Co.,Ltd			
Design Name: F133_EVB1			
Size: A3	Page Name: 02 BLOCK DIAGRAM		Rev
Date: Tuesday, December 08, 2020	Sheet 2 of 13		

DEFAULT POWER ON

DEFAULT POWER OFF

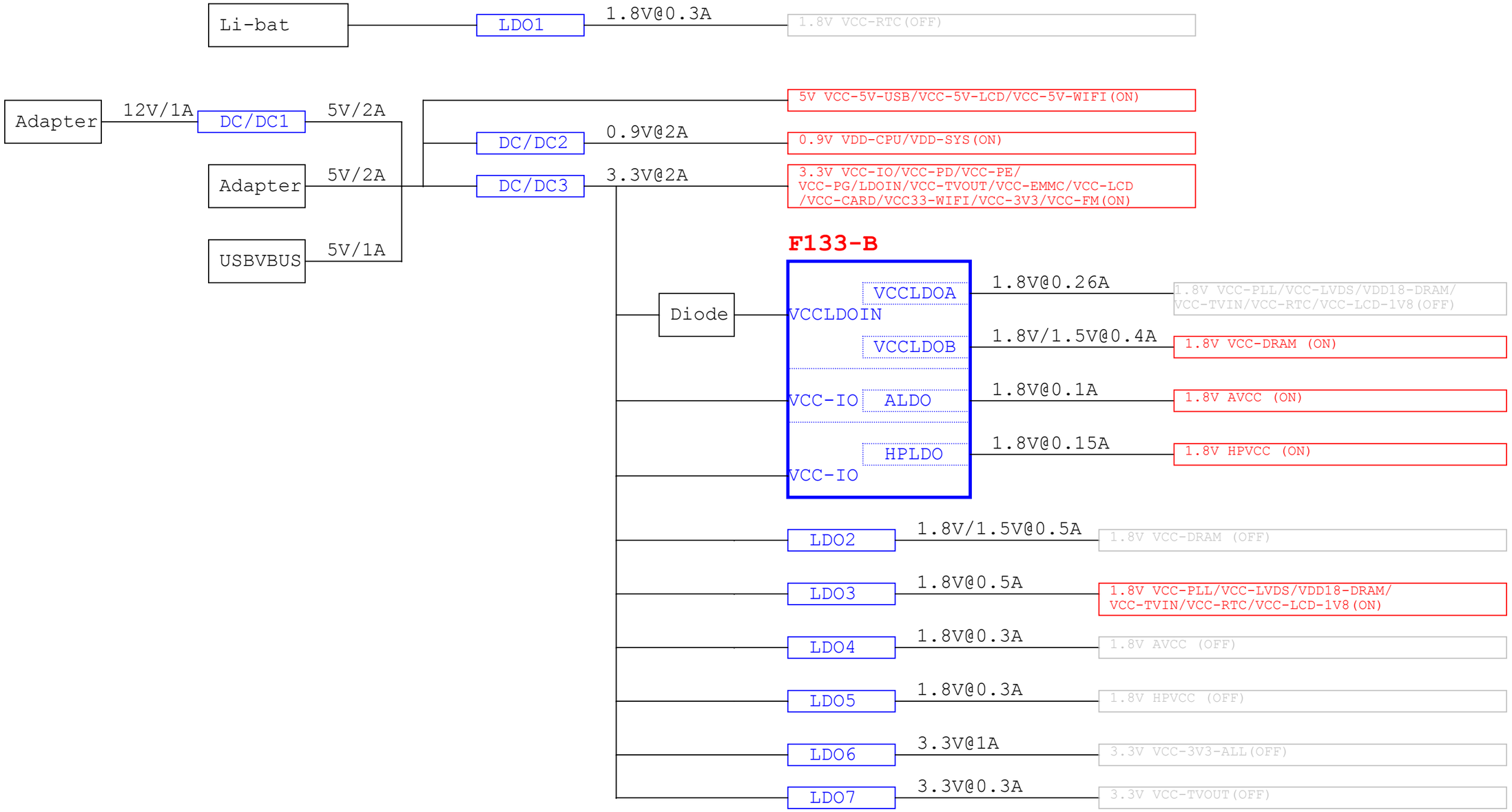

AllWinner Technology Co.,Ltd		
Design Name: F133_EVB1		
Size: A3	Page Name: 03 POWER TREE	Rev
Date: Tuesday, December 08, 2020	Sheet 3 of 13	

GPIO ASSIGNMENT

Pin Number	Pin Name	Signal Type	Multi2	Multi3	Multi4	Multi5	Multi6	Multi7	Multi8	Multi14
1	PG6	I/O	UART1_TX	TWI2_SCK	RGMII_TXD2	PWM1				PG_EINT6
2	PG7	I/O	UART1_RX	TWI2_SDA	RGMII_TXD3	SPDIF_IN				PG_EINT7
3	PG8	I/O	UART1_RTS	TWI1_SCK	RGMII_RXD2	UART3_TX				PG_EINT8
4	PG9	I/O	UART1_CTS	TWI1_SDA	RGMII_RXD3	UART3_RX				PG_EINT9
5	PG10	I/O	PWM3	TWI3_SCK	RGMII_RXCK	CLK_FANOU	IR_RX			PG_EINT10
6	PG11	I/O	I2S1_MCLK	TWI3_SDA	EPHY_25M	CLK_FANOU	TCON_TRIG			PG_EINT11
7	PF0	I/O	SDC0_D1	JTAG_MS	R_JTAG_MS	I2S2_DOUT1	I2S2_DIN0			PF_EINT0
8	PF1	I/O	SDC0_D0	JTAG_DI	R_JTAG_DI	I2S2_DOUT0	I2S2_DIN1			PF_EINT1
9	PF2	I/O	SDC0_CLK	UART0_TX	TWI0_SCK	LEDC_DO	SPDIF_IN			PF_EINT2
10	PF3	I/O	SDC0_CMD	JTAG_DO	R_JTAG_DO	I2S2_BCLK				PF_EINT3
11	PF4	I/O	SDC0_D3	UART0_RX	TWI0_SDA	PWM6	IR_TX			PF_EINT4
12	PF5	I/O	SDC0_D2	JTAG_CK	R_JTAG_CK	I2S2_LRCK				PF_EINT5

POWER 1

5V INPUT

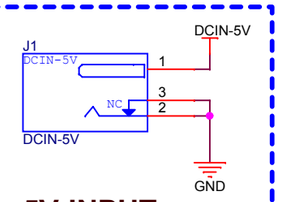

12V INPUT

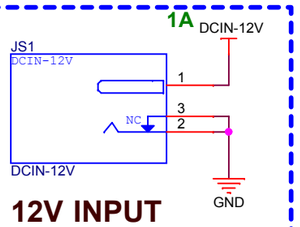

BAT SOCKET

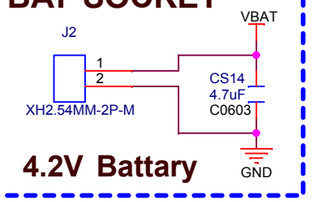

4.2V Battary

USB TO PS

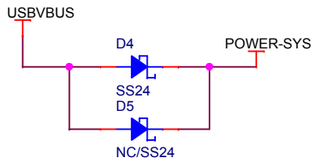

Power Input Option

5V DCIN TO PS

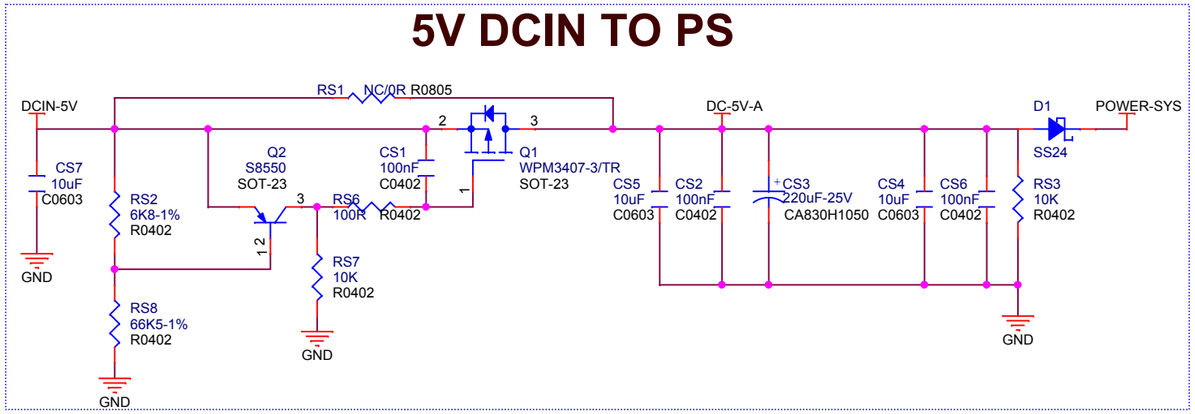

12V DCIN TO PS

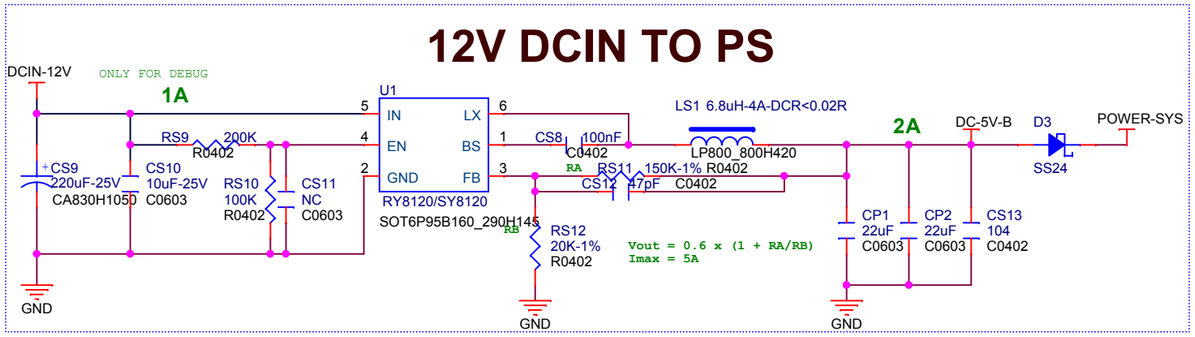

BAT TO PS

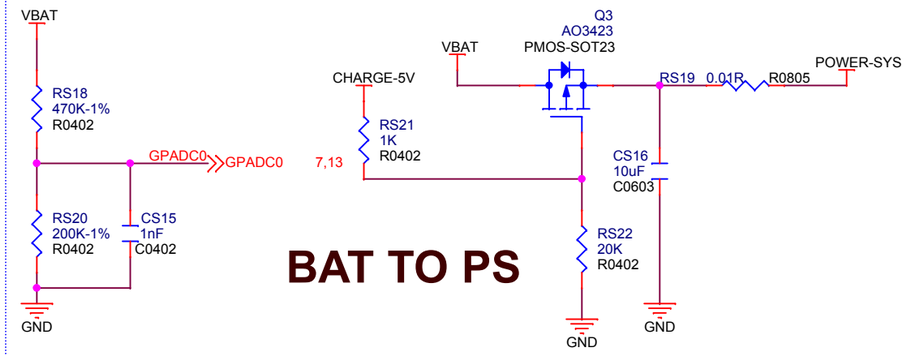

Priority : DC > BAT, USB > BAT

CHARGE CONTROL

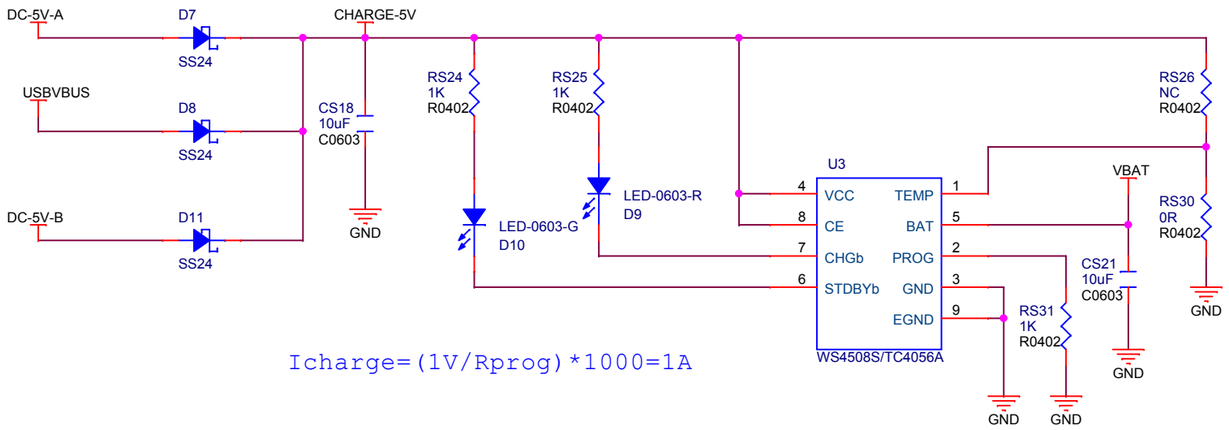

Icharge=(1V/Rprog)*1000=1A

POWER-ON KEY

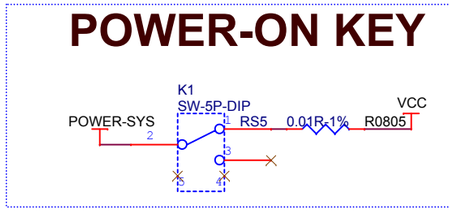

POWER-LED

5V Supply Choose

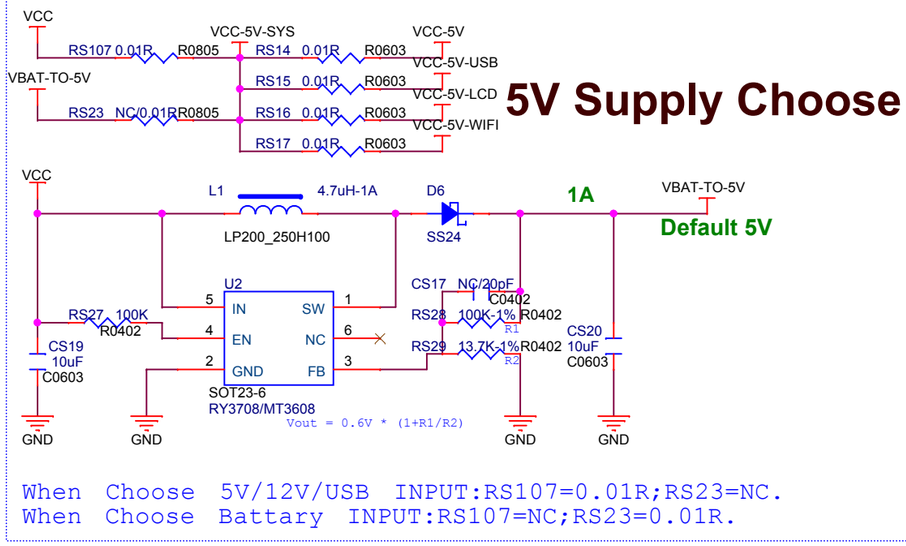

When Choose 5V/12V/USB INPUT:RS107=0.01R;RS23=NC.
When Choose Battary INPUT:RS107=NC;RS23=0.01R.

POWER-ON KEY

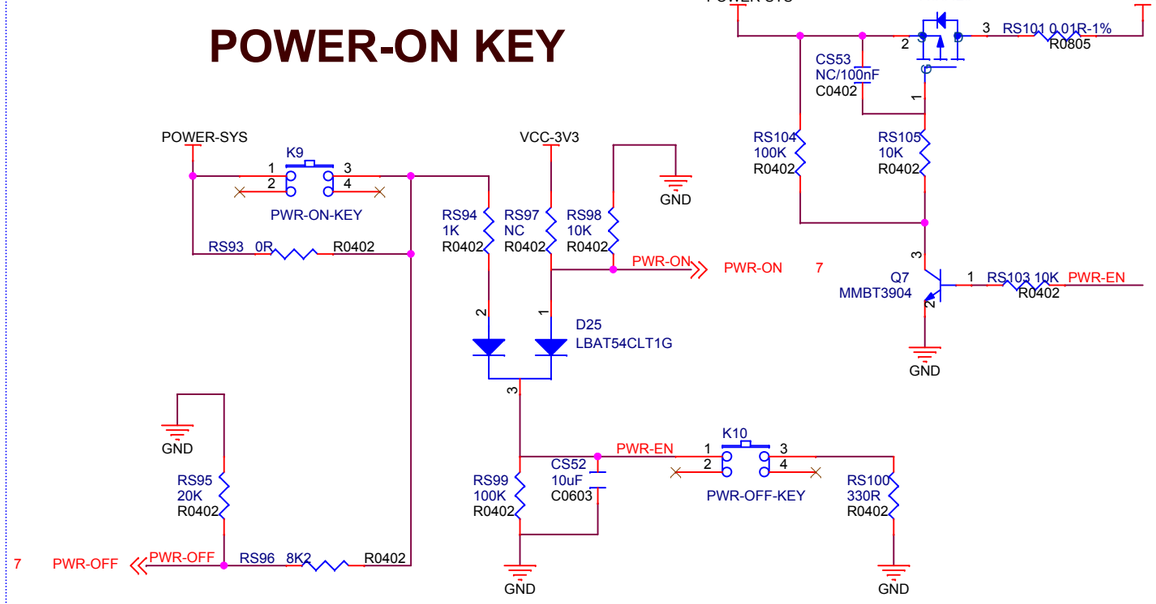

power up :SW KEY on , power down : PWR-EN keep high for 1000ms

Layout Guide : POWER-SW 's ON , OFF silkscreen text needed

AllWinner Technology Co.,Ltd	
Design Name	F133_EVB1
Size A3	Page Name 05 POWER1
Rev	
Date: Friday, December 04, 2020	Sheet 5 of 13

POWER 2

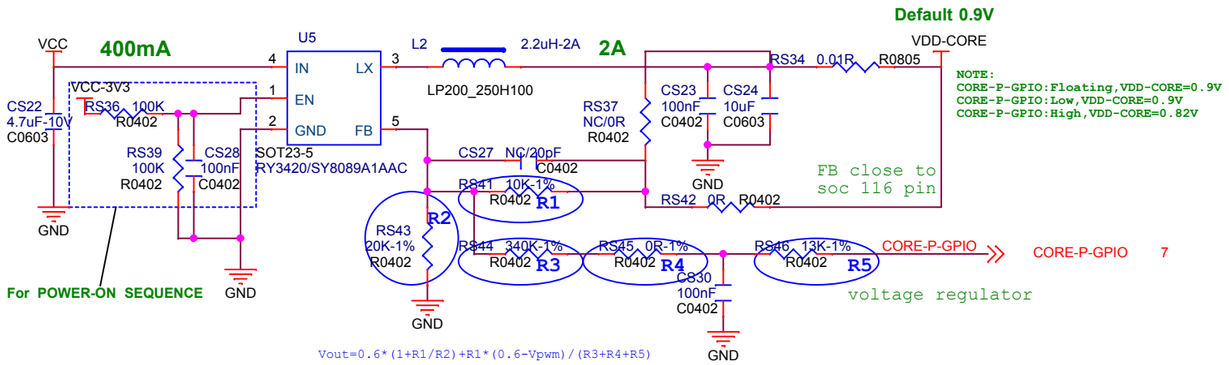

NOTE:
CORE-P-GPIO:Floating,VDD-CORE=0.9V
CORE-P-GPIO:Low,VDD-CORE=0.9V
CORE-P-GPIO:High,VDD-CORE=0.82V

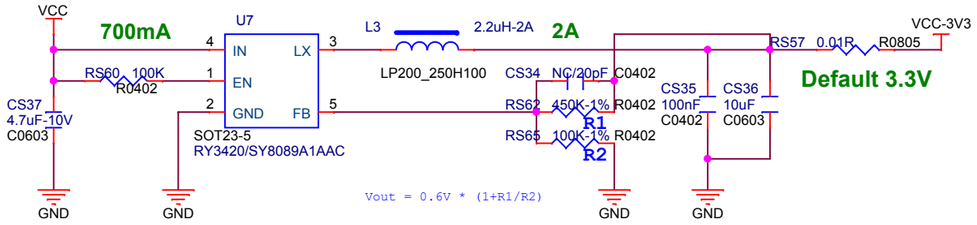

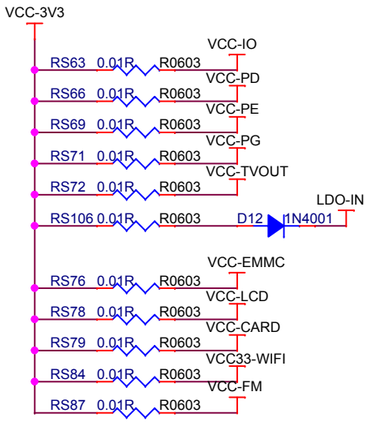

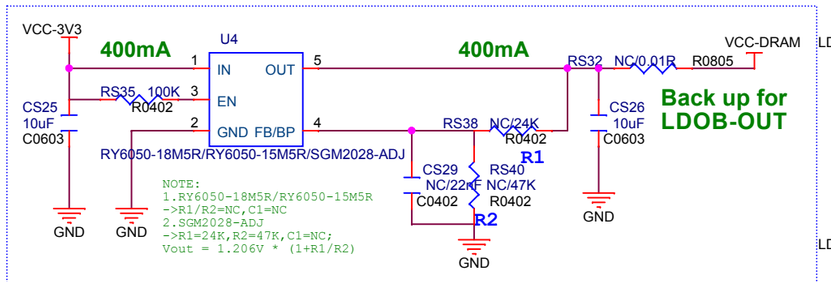

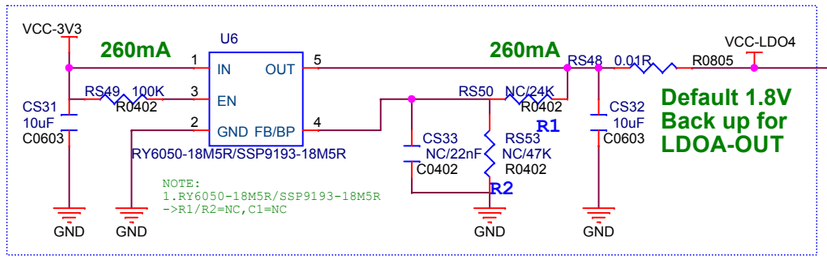

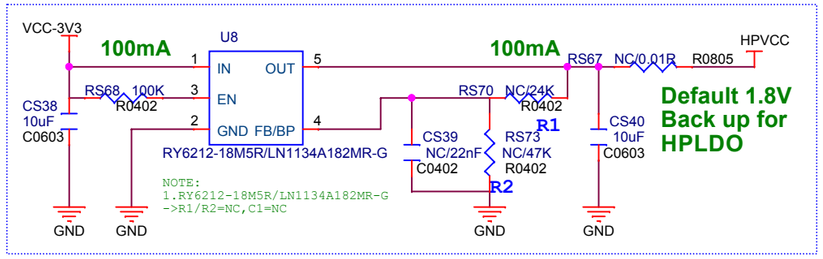

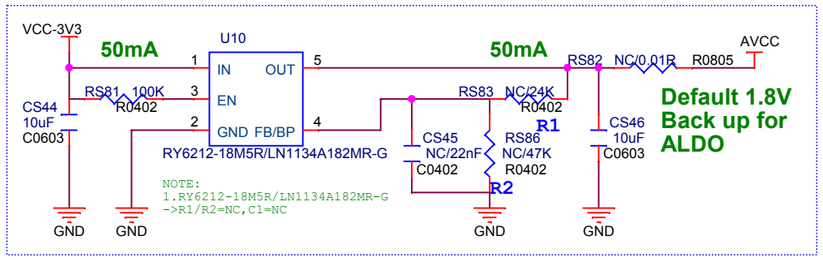

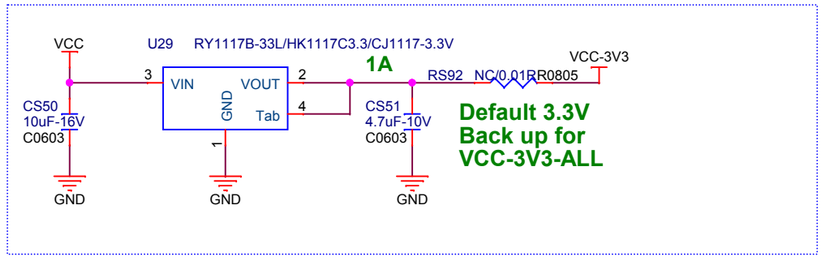

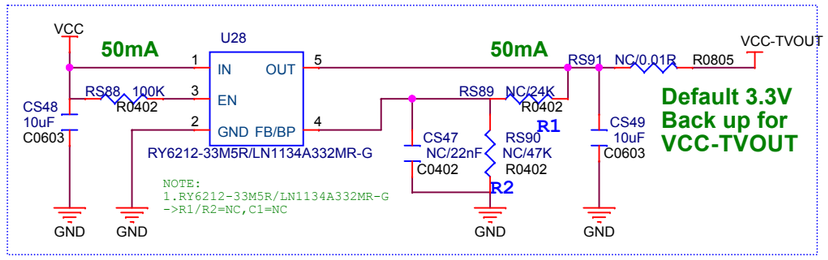

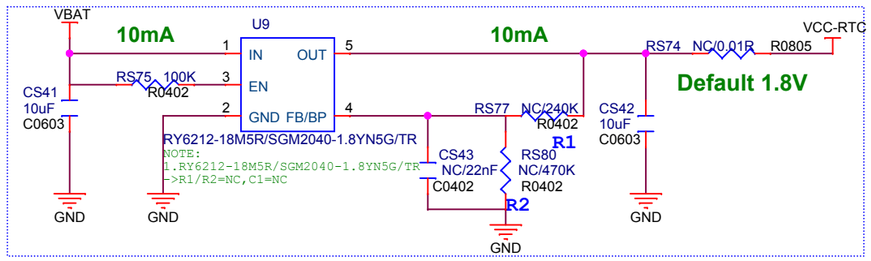

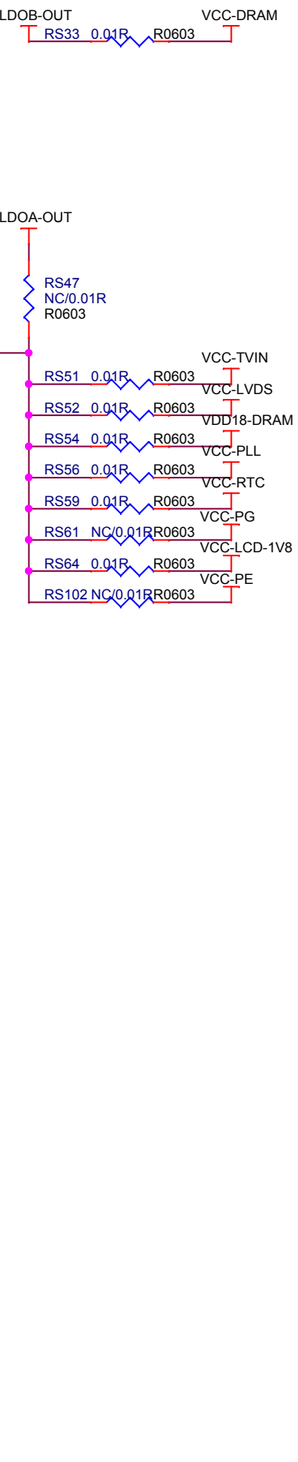

AllWinner Technology Co.,Ltd
Design Name: F133_EVB1
Size: A3
Page Name: 06 POWER2
Rev:
Date: Friday, December 04, 2020
Sheet 6 of 13

SOC

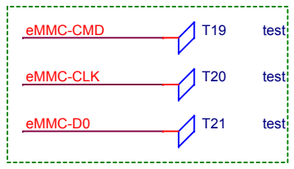

close to SOC

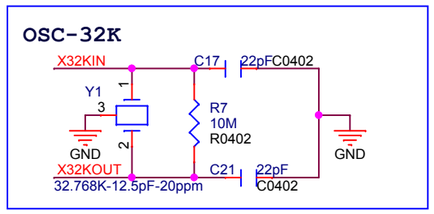

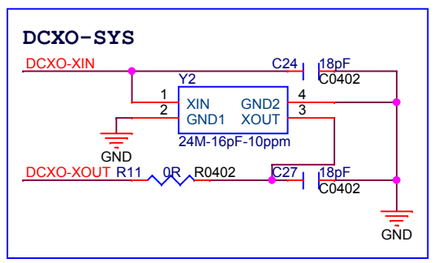

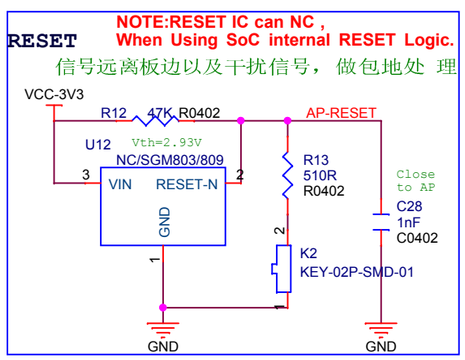

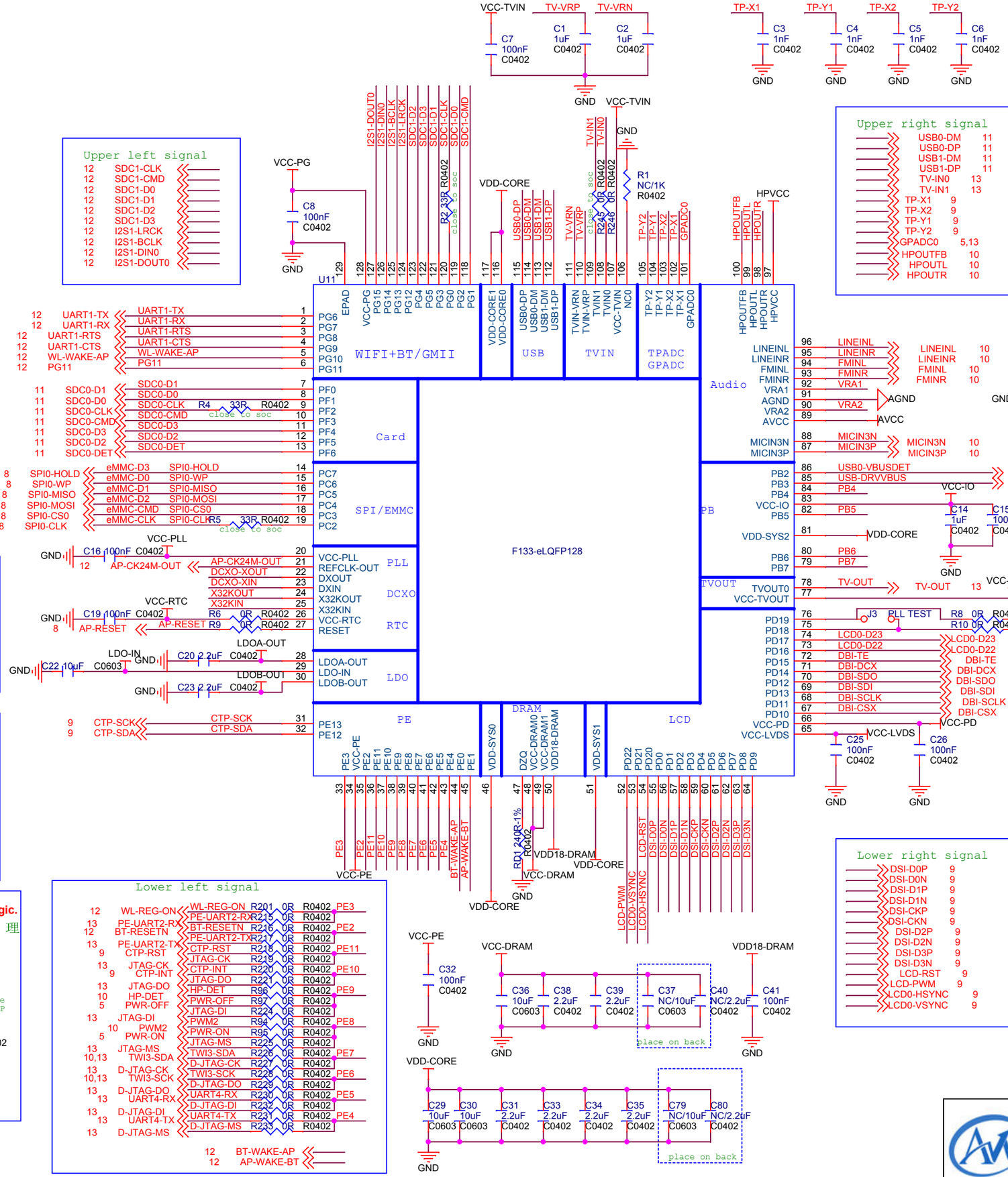

AllWinner Technology Co.,Ltd		
Design Name: F133_EVB1		
Size: A3	Page Name: 07 SOC	Rev
Date: Friday, December 04, 2020	Sheet 7 of 13	

SPI

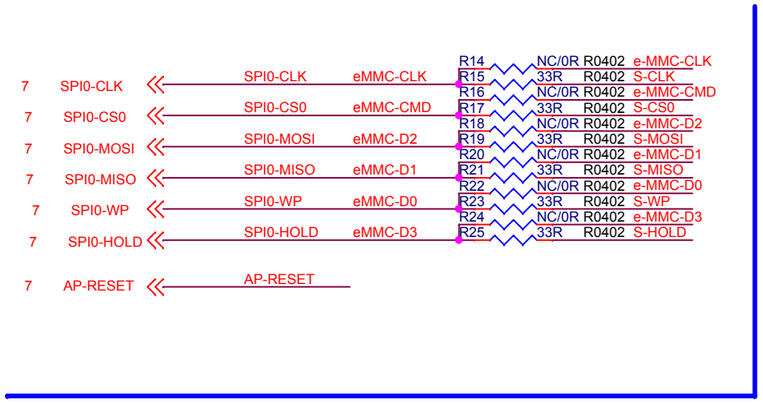

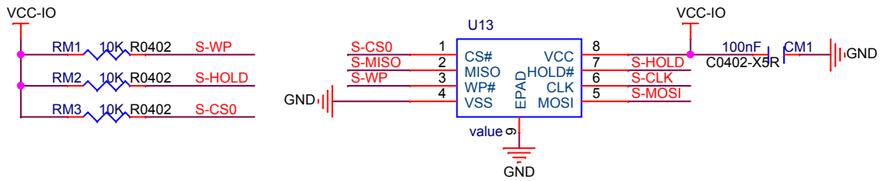

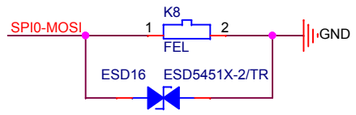

EMMC

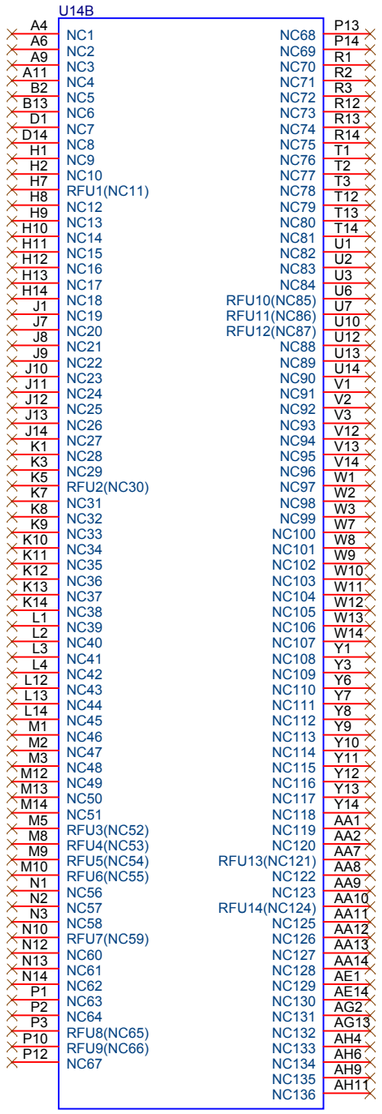

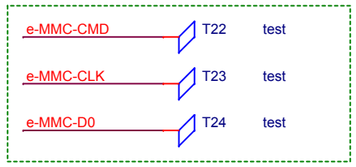

close to EMMC

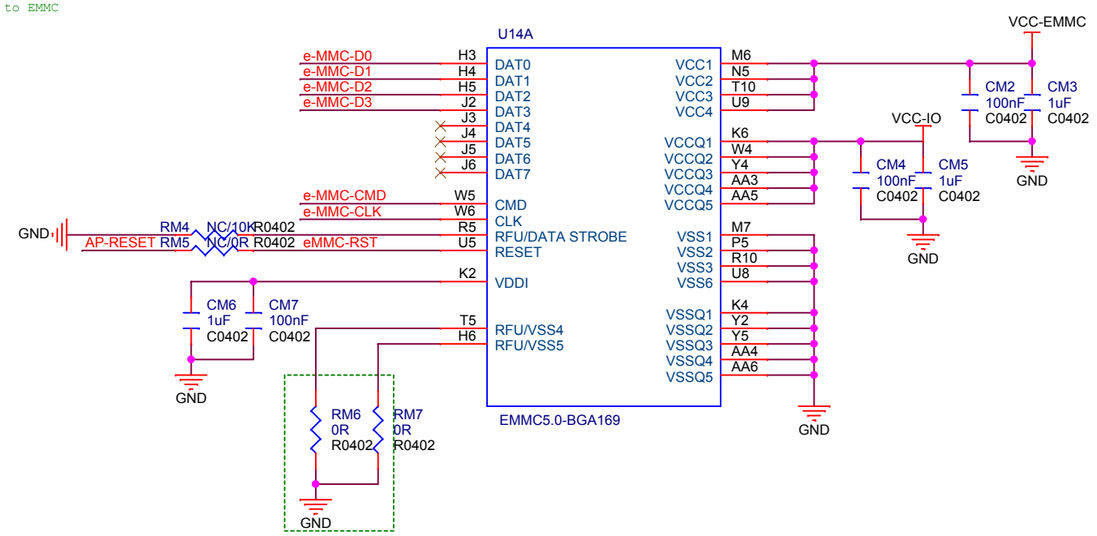

If eMMC is not v5.0/v5.1,then NC this two resistors.

AllWinner Technology Co.,Ltd		
Design Name: F133_EVB1		
Size: A3	Page Name: 08 FLASH SDC/JTAG DEBUG	Rev
Date: Friday, December 04, 2020	Sheet 8 of 13	

DSI

BACK LIGHT

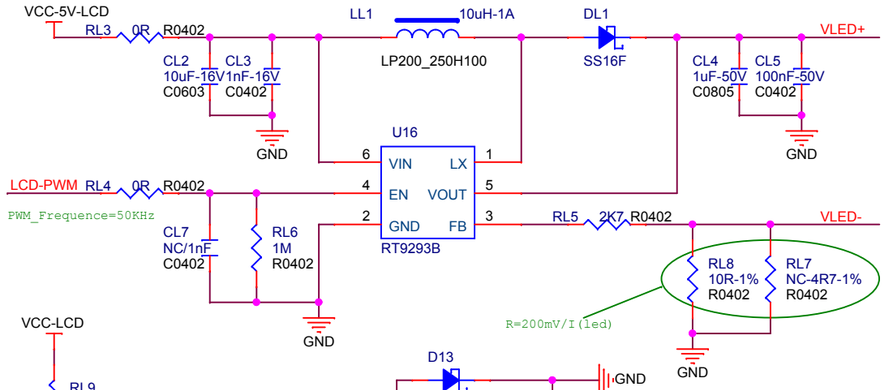

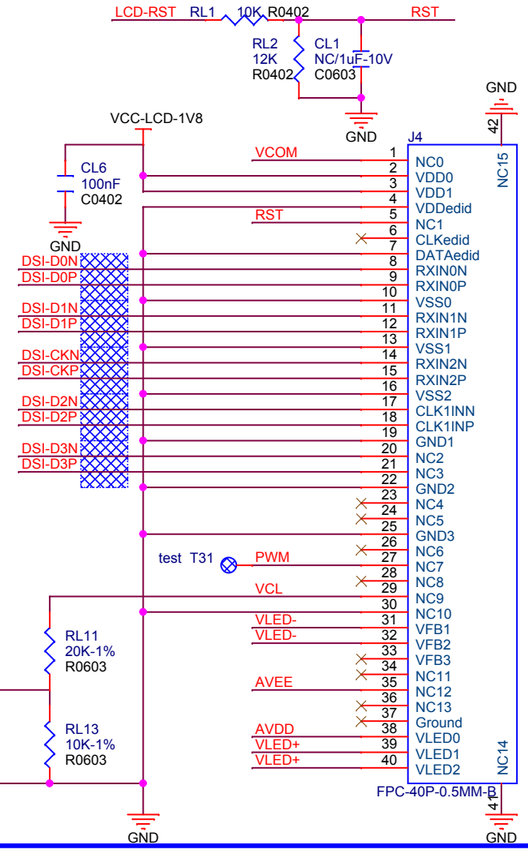

DSI-D0P	R26	0R	R0402	LCD0-D2
DSI-D0N	R27	0R	R0402	LCD0-D3
DSI-D1P	R28	0R	R0402	LCD0-D4
DSI-D1N	R29	0R	R0402	LCD0-D5
DSI-CKP	R30	0R	R0402	LCD0-D6
DSI-CKN	R31	0R	R0402	LCD0-D7
DSI-D2P	R32	0R	R0402	LCD0-D10
DSI-D2N	R33	0R	R0402	LCD0-D11
DSI-D3P	R34	0R	R0402	LCD0-D12
DSI-D3N	R35	0R	R0402	LCD0-D13
DBI-CSX	R36	0R	R0402	LCD0-D14
DBI-SCLK	R37	0R	R0402	LCD0-D15
DBI-SDO	R38	0R	R0402	LCD0-D18
DBI-SDI	R39	0R	R0402	LCD0-D19
DBI-DCX	R40	0R	R0402	LCD0-D20
DBI-TE	R41	0R	R0402	LCD0-D21

7 DSI-D0P
7 DSI-D0N
7 DSI-D1P
7 DSI-D1N
7 DSI-CKP
7 DSI-CKN
7 DSI-D2P
7 DSI-D2N
7 DSI-D3P
7 DSI-D3N
7 DBI-CSX
7 DBI-SCLK
7 DBI-SDO
7 DBI-SDI
7 DBI-DCX
7 DBI-TE

7 LCD0-D22
7 LCD0-D23
7 LCD0-CLK
7 LCD0-DE
7 LCD0-HSYNC
7 LCD0-VSYNC

7 LCD-RST
7 LCD-PWM

7 TP-X1
7 TP-X2
7 TP-Y1
7 TP-Y2

7 CTP-INT — CTP-INT
7 CTP-RST — CTP-RST
7 CTP-SCK — CTP-SCK
7 CTP-SDA — CTP-SDA

7 LCD0-PIO0
7 LCD0-PIO1
7 LCD0-PIO2

NOTE:
Differential pairs
Z0= 100 ohm

SPI PANEL

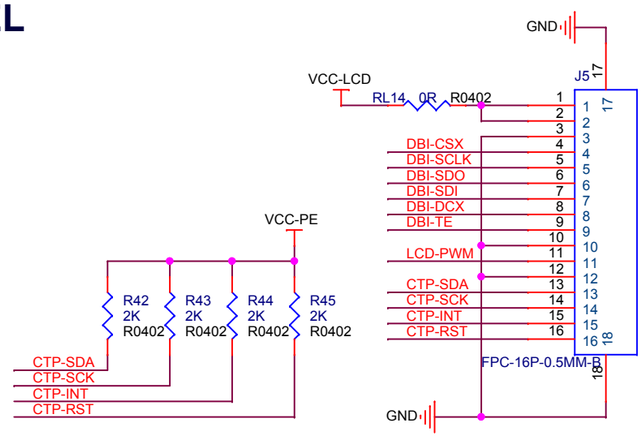

CTP

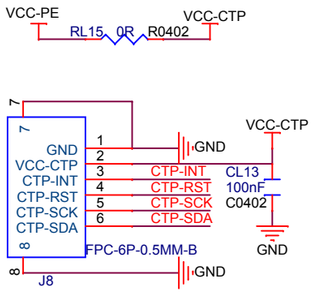

RTP

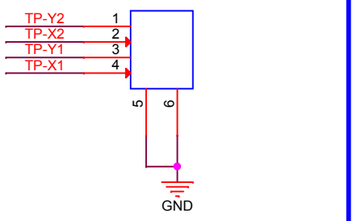

RGB LCD

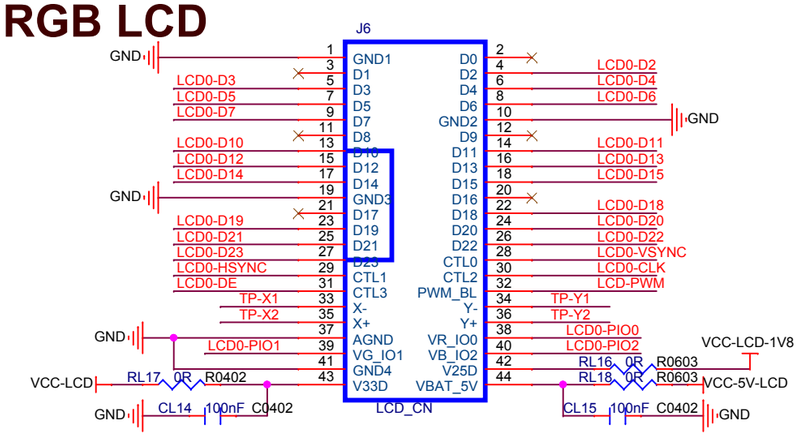

AllWinner Technology Co.,Ltd		
Design Name: F133_EVB1		
Size: A3	Page Name: 09 LCD	Rev
Date: Friday, December 04, 2020	Sheet 9 of 13	

FM

7 HP-DET
7 MICIN3N
7 MICIN3P
7 LINEINL
7 LINEINR
7 FMINL
7 FMINR
7 HPOUTFB
7 HPOUTL
7 HPOUTR
7 PWM2
7,13 TWI3-SCK
7,13 TWI3-SDA
7 PA-SHDN

ANT1
FM_ANT
ESD9B5VL-2/TR
ESD0402
VCC-FM
FB1 2.5K-100M L0603
C43 10uF C0603
C44 104 C0402
C45 102 C0402
C49 101 C0402
C52 22pF C0402
L4 100nH L0603
U18
RDA5807M MSOP-10
TWI3-SCK
TWI3-SDA
R49 0R R0402
R50 NC-0R R0402
R52 0R R0402
R53 NC-0R R0402
R54 0R R0402
R55 47K R0402
R56 0R R0402
R57 0R R0402
C51 104 C0402
C54 104 C0402
C56 56pF C0402
FMINL
FMINR
PWM2
7Bits I2C Address: 0x10

AVCC
R46 2.2R MBIAS R0402
MIC1 Micphone MIC_600x270
ESD5451X-2/TR
ESD2
ESD3
C46 NC/33pF C0402
C53 100pF C0402
C55 NC/33pF C0402
MICIN3P-MIC
MICIN3N-MIC
R47 1K MBIAS R0402
R48 1K R0402
R51 1K R0402
R54 1K R0402
C42 1uF C0402
C47 100nF MICIN3P C0402
C48 10uF C0603
C50 100nF MICIN3N C0402

Layout: RF 50ohm Line Width

LINEINL C57 2.2uF C0402
LINEINR C60 2.2uF C0402
R60 4.7K R0402
R61 4.7K R0402
R62 4.7K R0402
R63 4.7K R0402
J9
PJ-327F
ESD5451X-2/TR
ESD4
ESD5

test T25
test T26
HP-DET
HPOUTL
HPOUTR
HPOUTFB
R58 1M R0402
R59 1K R0402
C58 22uFC0805
C59 22uFC0805
C61 100nF C0402
J10
PJ-327F
C62 100nF C0402
C63 100nF C0402
R64 22R R0402
R65 22R R0402
D16
D17
D18
D19
100nF Cap connects to GND and close to HP jack

Note:
HPOUTFB must connect 100nF to GND,when HPOUTL/HPOUTR is used.

Note:
HPOUTL/HPOUTR must be connected to this circuit network, when HPOUTL/HPOUTR is used.

U19
LY8006
R66 1M R0402
C64 0.22uF C0402
PA-SHDN
PA-VDD
SPKR+
SPKR-
C66 1uF C0402
HPOUTR C68 100nF C0402
R68 20K R0402
R69 100K-1% R0402

U20
LY8006
R67 1M R0402
C65 0.22uF C0402
SPKL+
SPKL-
C67 1uF C0402
HPOUTL C69 100nF C0402
R70 20K R0402
R71 100K-1% R0402

VCC-5V
B1 600R-100M L0603 PA-VDD
SPKR-
SPKR+
T27 test
T28 test
CON1 0_0.8T-2PWB
D20
D21
SPKL-
SPKL+
T29 test
T30 test
CON2 0_0.8T-2PWB
D22
D23

AllWinner Technology Co.,Ltd		
Design Name F133_EVB1		
Size A3	Page Name 10 AUDIO	Rev
Date: Friday, December 04, 2020	Sheet 10 of 13	

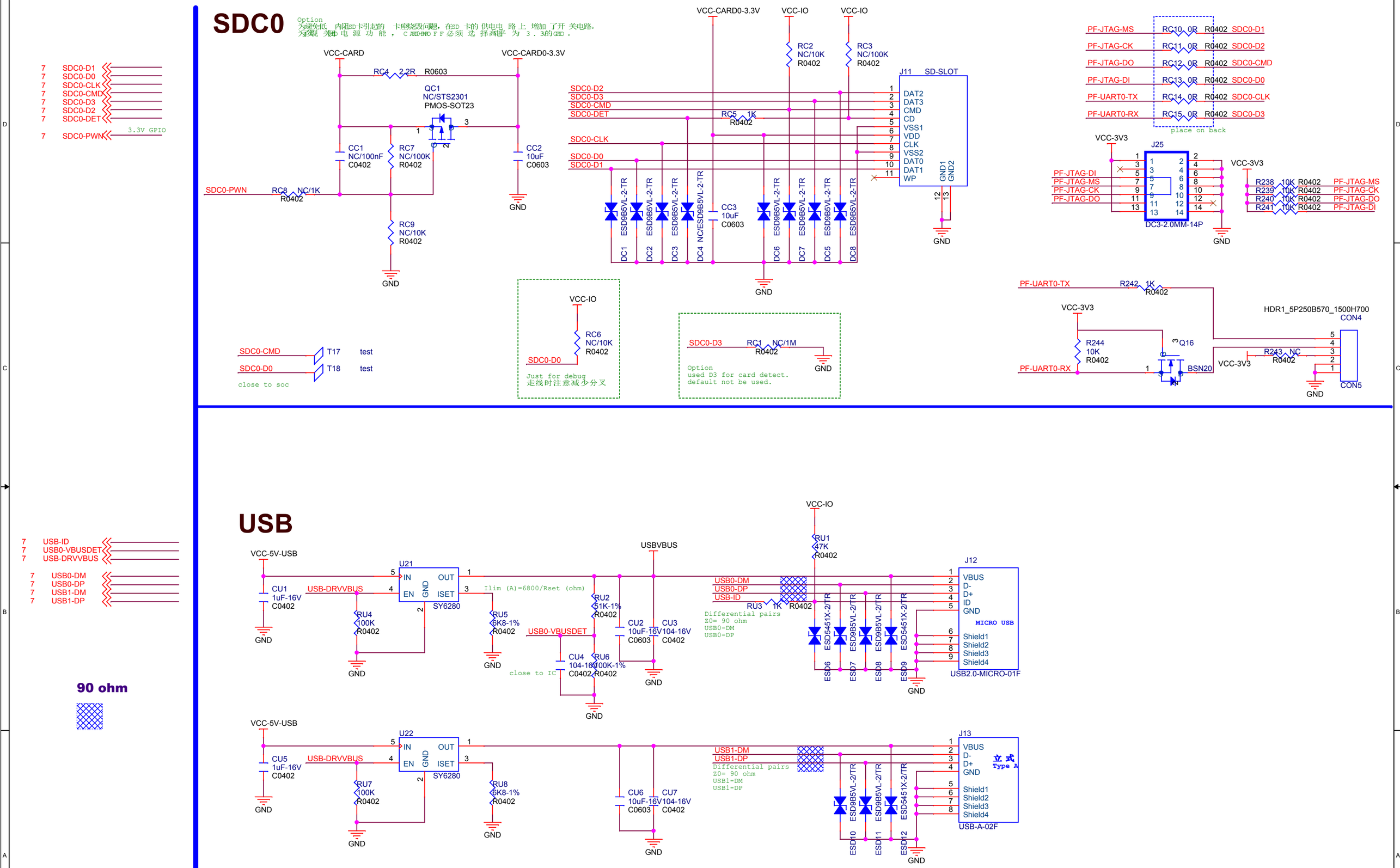

Note:
1.When USB0 As device,don't use USB1
2.If need use USB1 when USB0 as device,
please short U22 pin 1& pin 5,and USB-DRVVBUS pull low

AllWinner Technology Co.,Ltd		
Design Name: F133_EVB1		
Size: A3	Page Name: 11 CARD USB	Rev
Date: Friday, December 04, 2020	Sheet 11 of 13	

XR819S ON BOARD

7 SDC1-CLK — WL-SDIO-CLK-AP
7 SDC1-CMD — WL-SDIO-CMD
7 SDC1-D0 — WL-SDIO-D0
7 SDC1-D1 — WL-SDIO-D1
7 SDC1-D2 — WL-SDIO-D2
7 SDC1-D3 — WL-SDIO-D3
7 WL-REG-ON — WL-SDIO-D3
7 WL-WAKE-AP — WL-WAKE-AP
7 AP-CK24M-OUT — AP-CLK-OUT
7 PG11 — PG11

7 UART1-TX — BT-HCI-RX
7 UART1-RX — BT-HCI-TX
7 UART1-RTS — BT-HCI-CTS
7 UART1-CTS — BT-HCI-RTS
7 BT-WAKE-AP — BT-WUP-HOST
7 AP-WAKE-BT — BT-HOST-WUP
7 BT-RESETN — BT-RESETN

7 I2S1-BCLK — BT-PCM-CLK
7 I2S1-LRCK — BT-PCM-SYNC
7 I2S1-DOUT0 — BT-PCM-DIN
7 I2S1-DIN0 — BT-PCM-DOUT

VCC-5V-WIFI — RW5 NC/0R R0603 — VCC-WIFI
VCC33-WIFI — RW6 0R R0603
VCC-PG — RW8 0R R0603 — VDDIO

VDDIO — RW11 NC/47K R0402 — WL-SDIO-CLK
RW12 47K R0402 — WL-SDIO-CMD
RW13 47K R0402 — WL-SDIO-D0
RW14 47K R0402 — WL-SDIO-D1
RW15 47K R0402 — WL-SDIO-D2
RW16 47K R0402 — WL-SDIO-D3

50 ohm

XR819S-XTAL1 — Y3 (XIN, GND1, GND2, XOUT; 24M-16pF-10ppm) — RW3NC/0R R0402 — XR819S-XTAL2
CW5 20pF C0402 — GND — GND
CW7 20pF C0402 — GND

Clock Source	CW5	RW3	RW7
AP-CLK-OUT	0R	NC	0R
External Crystal	20pF	0R	NC

AP-CLK-OUT — RW7 0R R0402 — XR819S-XTAL2

XR819S use AP 24MHz Clock out

U23 XR819S

XR819S-XTAL2	38	HXTAL2	
XR819S-XTAL1	37	HXTAL1	
	33	FEM_CTRL1	
	32	FEM_CTRL2	
GND	16	TEST	
BT-HOST-WUP	5	BT_HOST_WUP	
BT-WUP-HOST	6	BT_WUP_HOST	
BT-RESETN	20	BRESTN	
BT-HCI-TX	15	UART_TX	
BT-HCI-RX	14	UART_RX	
BT-HCI-CTS	13	UART_CTS	
BT-HCI-RTS	12	UART_RTS	
WL-SDIO-CMD	31	SDIO_CMD	
WL-SDIO-D0	30	SDIO_DATA0	
WL-SDIO-D1	28	SDIO_DATA1	
WL-SDIO-D2	26	SDIO_DATA2	
WL-SDIO-D3	27	SDIO_DATA3	
WL-SDIO-CLK	29	SDIO_CLK	
WL-RESETN	17	WRESTN	
WL-WAKE-AP	35	WIRQ	
	4	CLKREQOUT	
	3,7,8,9,10,11,34,36	NC1,NC2,NC3,NC4,NC5,NC6,NC7,NC8	
	40	ANT	
	21	VBAT	
	18	VDD_IO	
	25	VDD-IO	
	22	VDD_EXT	
	1	VDD_PA	
	19	VDD_DIG	
	2	VDD_TX	
	24	VDD_SENSE	
	23	VDD_LX	
	39	VDD_ANA	
	41	EPAD	

RW1 should Close to PI Matching Network

ANT — RW1 0R R0402 — ANT0

VCC-WIFI — VDDIO — VDD-EXT — VDD-SENSE

VBAT: CW1 1uF C0402 — GND
VDD_IO: CW2 1uF C0402 — GND
VDD-IO: CW11 1uF C0402 — GND
VDD_EXT: CW9 1uF C0402 — GND
VDD_PA: CW3 1uF C0402 — GND
VDD_DIG: CW8 1uF C0402 — GND
VDD_TX: CW6 1uF C0402 — GND

Place capacitors near the IC

RW4 NC R0402
VDD_SENSE: CW10 4.7uF C0402 — GND
VDD_LX: LW1 L0805 2.2uH-1.0A DCR<0.2R
VDD_ANA: RW26 0R R0402 — CW18 1uF C0402 — GND

WL-SDIO-CLK-AP — RW2 0R R0603 — WL-SDIO-CLK
20mil
15mil
CW4 NC C0402 — GND

Mode	RW4	LW1
DCDC Mode	NC	2.2uH
LDO Mode	0R	0R

CLKREQOUT needs to be pulled up to VDDIO
VDDIO — RW9 33K R0402
PG11 — RW27 0R R0402 — CLKREQOUT

WIFI MODULE

VCC-WIFI — CW12 10uF C0603 — GND
RW10 NC/100K R0402 — GND
BT-WAKE-AP
AP-WAKE-BT
ANT0 — GND

U24 AP6XXX

	11	XTAL_OUT	
	10	XTAL_IN	
	9	VBAT	
	8	BT_VIO/N_HOST_WAKE	
	7	BT_HOST_WAKE	
	6	BT_WAKE	
	5	N_WAKE	
	4	FM_RX	
	3	GND2	
	2	WL_BT_ANT	
	1	GND1	
WL-REG-ON	12	WL_REG_ON	
WL-WAKE-AP	13	WL_HOST_WAKE	
WL-SDIO-D2	14	SDIO_DATA_2	
WL-SDIO-D3	15	SDIO_DATA_3	
WL-SDIO-CMD	16	SDIO_DATA_CMD	
WL-SDIO-CLK	17	SDIO_DATA_CLK	
WL-SDIO-D0	18	SDIO_DATA_0	
WL-SDIO-D1	19	SDIO_DATA_1	
	20	GND3	
	21	VIN_LDO_OUT	
	22	VDDIO	
	23	VIN_LDO	
	24	LPO	
	25	PCM_OUT	
	26	PCM_CLK	
	27	PCM_IN	
	28	PCM_SYNC	
	29	VDD_TCXO	
	30	TCXO_IN	
	31	GND4	
	32	GPS_RF	
	33	GND5	
UART_CTS_N	44	BT-HCI-CTS	
UART_RXD	43	BT-HCI-RX	
UART_TXD	42	BT-HCI-TX	
UART_RTS_N	41	BT-HCI-RTS	
TX1	40		
TX2	39		
N_REG_PU	38		
N_I2C_SCL	37		
GND6	36		
N_I2C_SDA	35		
BT_RST_N	34	BT-RESETN	

VDDIO — CW15 4.7uF C0603 — GND
BT-RESETN — GND — RW20 NC/100K R0402 — GND

PG11 — RW21 0R R0402 — X32KFOUT
BT-PCM-DOUT
BT-PCM-CLK
BT-PCM-DIN
BT-PCM-SYNC
AP-CK24M-OUT — RW24 NC/0R R0402
MCLK-IN — GND

ANT1 — RW22 0R R0402 — RW23 0R R0402
CW16 NC C0402 — GND
CW17 NC C0402 — GND
A

ANT0 — RW18 0R R0402
CW13 NC C0402 — GND
CW14 NC C0402 — GND

RW17 NC/0R R0402 — JW1 ANT-IPX (G1, G2, TX/RX)
RW19 0R R0402 — JW2 — GND
ANT-F — GND

PI Matching Network is reconmmented to place as close as possible to IC ANT PIN1

NOTE :	A	
XR829 Module	NC	
RTL8723DS Module	NC	
RTL8723FS Module	Mounting	
RTL8733BS Module	Mounting	
RTL8821CS Module	Mounting	
RDA5622 Module	NC	

AllWinner Technology Co.,Ltd

Design Name: F133_EVB1

Size: A3 | Page Name: 12 WIFI | Rev:

Date: Monday, December 07, 2020 | Sheet 12 of 13

5,7 GPADC0

7 D-JTAG-MS
7 D-JTAG-DI
7 D-JTAG-DO
7 D-JTAG-CK

7 IR-RX

7 TWI1-SCK
7 TWI1-SDA

7,10 TWI3-SCK
7,10 TWI3-SDA

7 UART4-TX
7 UART4-RX

7 JTAG-MS
7 JTAG-DI
7 JTAG-DO
7 JTAG-CK

7 PE-UART2-TX
7 PE-UART2-RX

KEY ADC

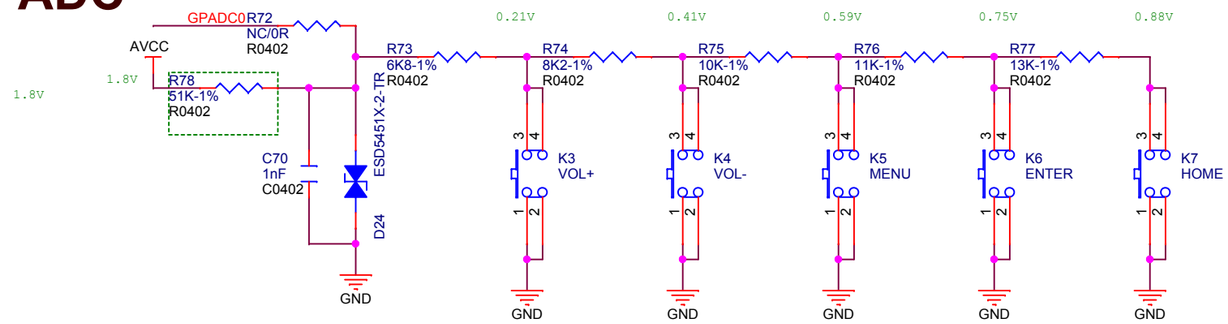

DEBUG

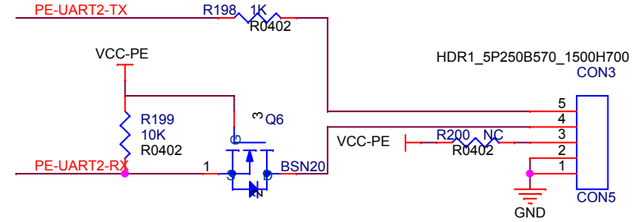

UART

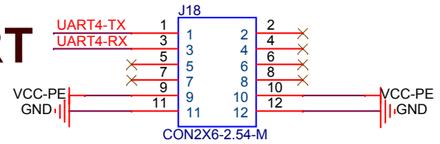

IR-RX

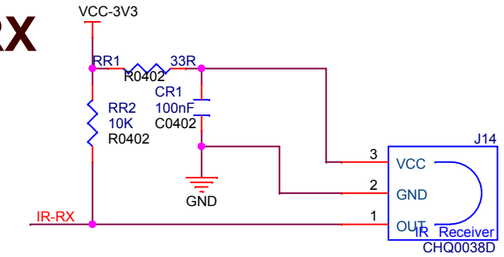

JTAG

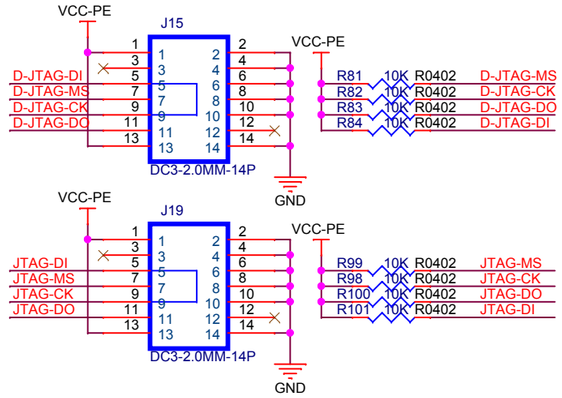

TWI

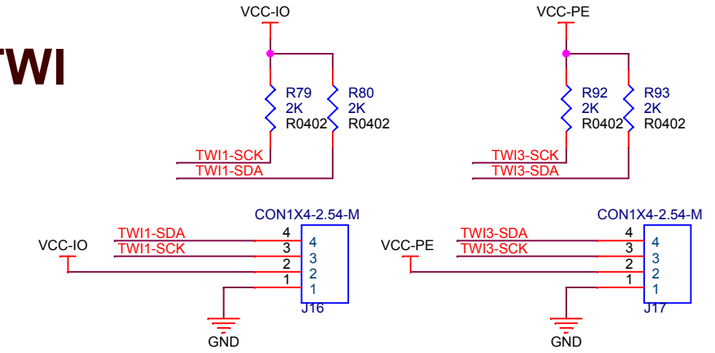

TV OUT

7 TV-OUT <<< TV-OUT

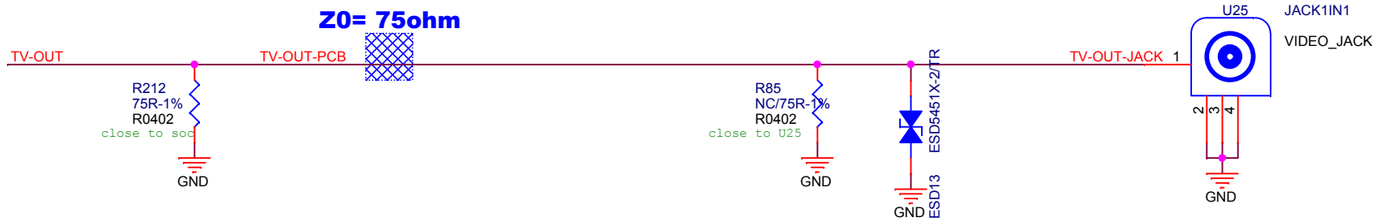

TV IN

7 TV-IN0 <<< TV-IN0

7 TV-IN1 <<< TV-IN1

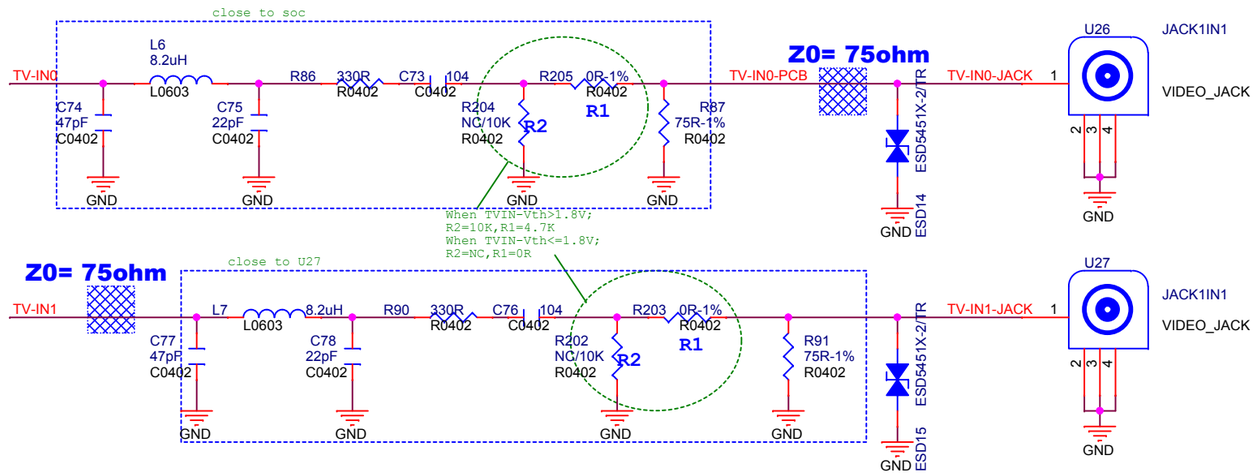

AllWinner Technology Co.,Ltd	
Design Name: F133_EVB1	
Size: A3	Page Name: 13 TV IR KEY TWI JTAG
Rev	
Date: Tuesday, December 08, 2020	Sheet 13 of 13