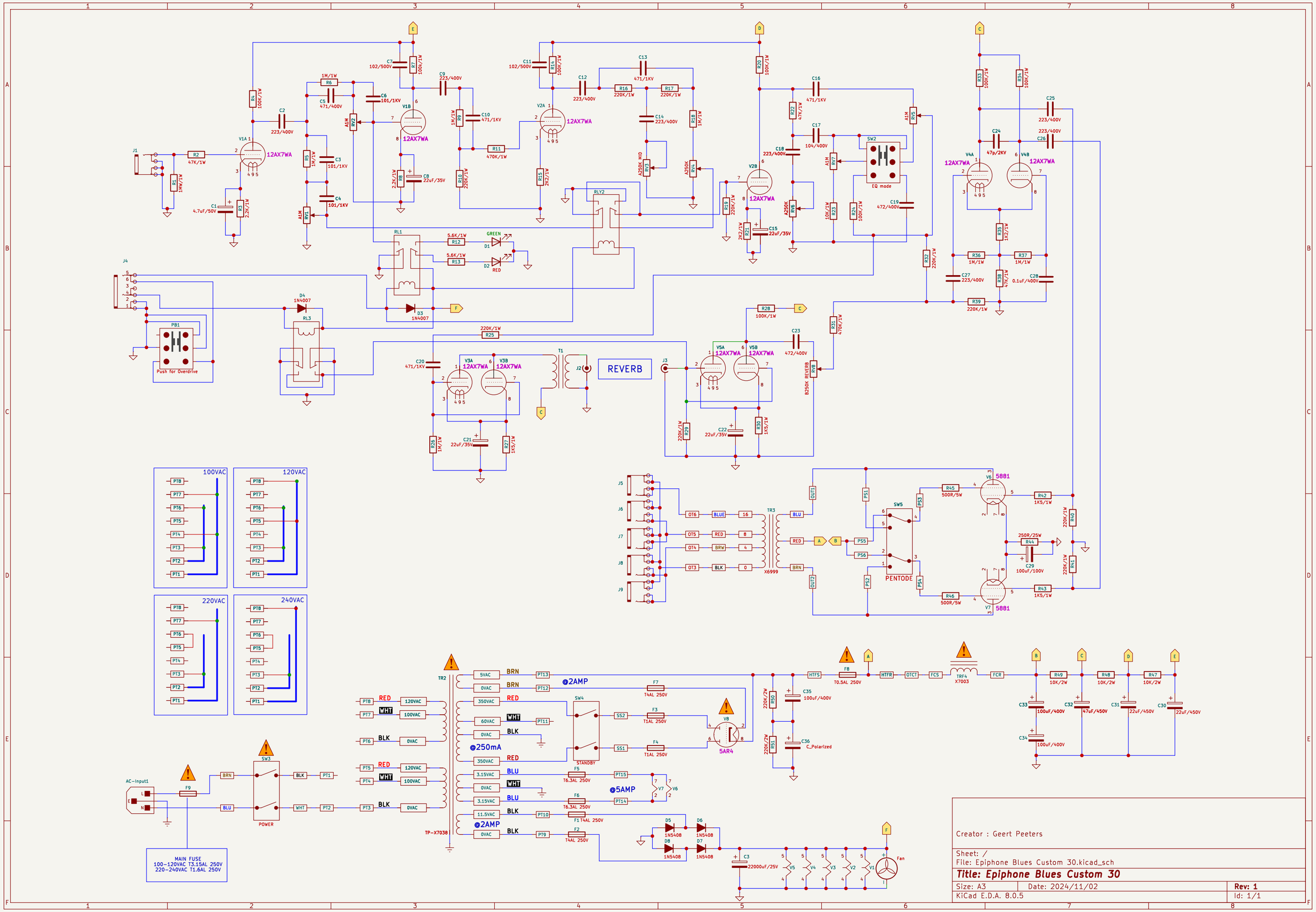
REVERB
Push for Overdrive
EQ mode
PENTODE
POWER
MAIN FUSE
100–120VAC T3.15AL 250V
220–240VAC T1.6AL 250V
Creator : Geert Peeters
Sheet: /
File: Epiphone Blues Custom 30.kicad_sch
Title: Epiphone Blues Custom 30
Size: A3
Date: 2024/11/02
Rev: 1
KiCad E.D.A. 8.0.5
Id: 1/1