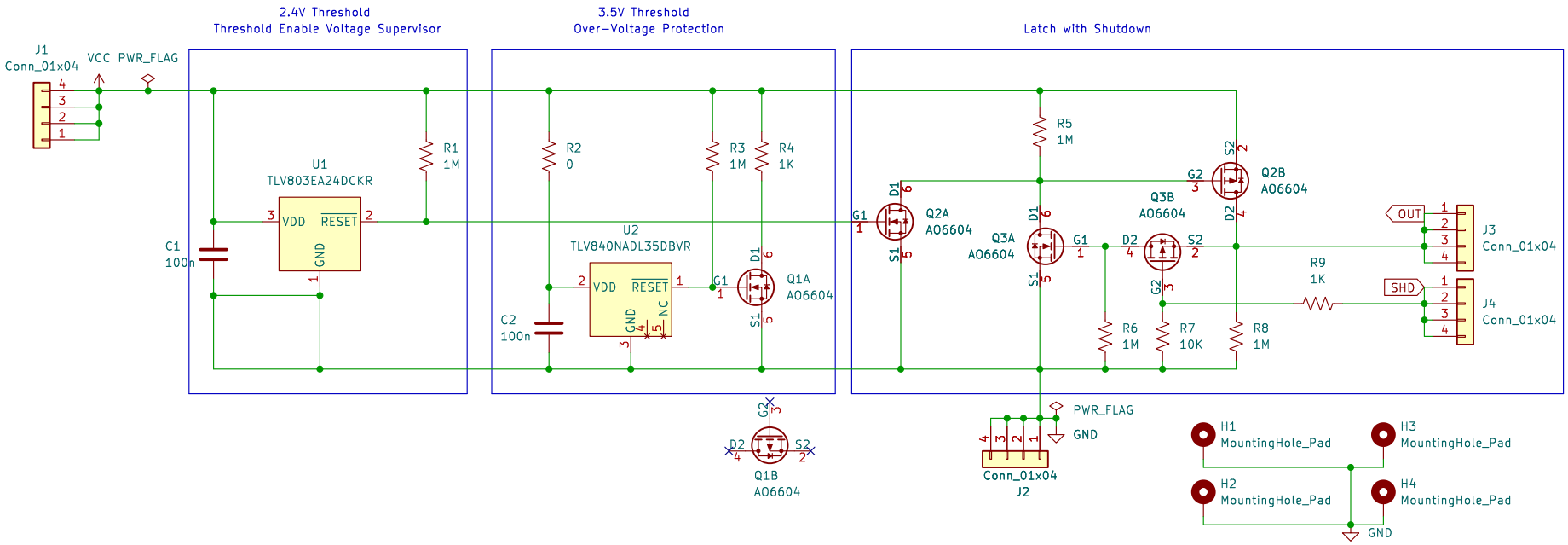

Gabriel Marcano
UC San Diego

Sheet: /
File: latch.kicad_sch

Title: Voltage-Controlled Power Latch

Size: USLetter	Date: 2023-02-13	**Rev: A**
KiCad E.D.A. kicad 7.0.2		Id: 1/1