CDM4GRPO: Cognitive Diagnosis-Guided Data Selection through Reinforcement Learning

Yu Genal

June 2025

Abstract

This paper introduces CDM4GRPO (Cognitive Diagnosis Model for Group Relative Policy Optimization), a novel framework that optimizes data selection in reinforcement learning (RL) by jointly considering the knowledge proficiency of large language models (LLMs) and the difficulty of mathematical problems. Our approach integrates neural cognitive diagnosis models (CDMs) with Group Relative Policy Optimization (GRPO) to dynamically select training samples in each step based on: (1) the iterative model's current knowledge proficiency and (2) the problem's knowledge difficulty. This dual-factor selection mechanism significantly improves training efficiency and achieves a reduction in GPU utilization compared to standard GRPO. Experiments on mathematical reasoning benchmarks demonstrate that CDM4GRPO yields a 20% average improvement in problem-solving accuracy. We are open-sourcing CDM4GRPO at https://github.com/genalyu/CDM4GRPO.

1 Introduction

Cognitive diagnosis for human has been studied extensively for decades. The purpose of cognitive diagnosis is to probe a person's cognitive state (e.g., knowledge proficiency) from person's behaviors (e.g., test reward), such as Noisy-And gate model (DINA) [2009], Item Response Theory (IRT) [2025] and Multidimensional IRT (MIRT) [2014]. Recently, Neural cognitive diagnosis model(CDM) was proposed and has been proven to be able to discover person's knowledge proficiency [2023]. Furthermore, CDM for LLMs is on the rise [2025].

Reinforcement learning (RL) [1999, 1996] in enhancing reasoning capabilities is remarkable(e.g., PPO [2017] and DPO [2023]). Notably, models like OpenAI-o1 [2024] and DeepSeek-R1 [2025] have leveraged RL to improve logical inference and question-solving skills by learning from experience and feedback. Here we improve one of RL's many forms, i.e. GRPO [2024], which is most efficient but instable.

"Less is more" principle of dataset scale for LLM train is gradually being proven [2025, 2023]. LIMR suggests that the way to better reasoning capabilities

lies also in being selective about which samples to use [2025]. In order to achieve this and maintain stability of GRPO, we use CDM to get LLM's knowledge proficiency and based on it select corresponding data for train in each step.

This method of selecting data knowledge difficulty based on the knowledge capability of LLM is similar to Curriculum Learning [2021], but it is more in line with the nature of LLM itself rather than humans.

2 Related Work

2.1 Cognitive Diagnosis Models (CDMs)

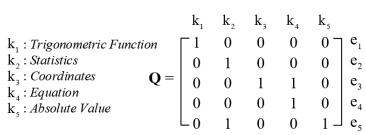

Figure 1: Q-matrix

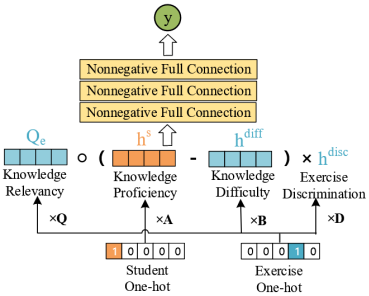

Figure 2: CDM

Cognitive Diagnosis Models (CDMs) are interpretable machine learning models designed to assess an individual's mastery of specific knowledge components (also referred to as "skills" or "attributes") based on their responses to a set of items or problems.

The core idea of CDMs is to model the relationship between observed item responses and latent knowledge states. Each item (e.g., a math problem) is assumed to require one or more specific skills, which are encoded in a binary **Q-matrix**. The Q-matrix maps items to the required skills, where an entry of 1 indicates that a skill is required to solve the item, and 0 otherwise.

Given a learner's responses and the Q-matrix, CDMs aim to estimate two key components:

- **Knowledge proficiency(KP)** of the learner: a vector (binary or continuous) indicating which skills the learner has mastered.
- **Knowledge difficulty(KD)** of each item: an estimation of how challenging the item is based on the required skills and learner performance.

Classic CDMs include models such as the Deterministic Input, Noisy "And" gate (DINA) model and its variants. Recent advancements introduce neural-based approaches like *NeuralCD*, which leverage deep learning to improve scalability and flexibility while maintaining interpretability.

CDMs are widely applied in personalized learning systems, educational assessment, and, more recently, in analyzing the cognitive profiles and skill acquisition of large language models (LLMs).

2.2 Reinforcement Learning

Policy optimization is a core component of reinforcement learning (RL) for language models. In particular, Proximal Policy Optimization (PPO) is a widely used on-policy actor-critic algorithm in this domain. PPO maximizes a clipped surrogate objective to stabilize updates, using a learned value function to compute advantages for each action . This design generally yields robust training, but at a cost: it requires maintaining both a policy (actor) and a value (critic) network (often along with a fixed reference policy), which significantly increases memory and compute requirements.

Group Relative Policy Optimization (GRPO) is a recently proposed variant of PPO designed to reduce training overhead while improving learning signals. Rather than relying on a learned value function, GRPO computes advantages empirically from the rewards of a group of sampled outputs. Concretely, for each input (e.g. a question or prompt), the policy generates a batch of response candidates; the reward of each candidate is then normalized relative to the group's average (and standard deviation) reward. Each response's advantage is its (reward – mean) divided by the group's standard deviation (plus a small constant), effectively centering and scaling the rewards within the group. The policy is updated with a PPO-style objective: a clipped probability ratio (and optional KL penalty) is applied using these group-normalized advantages. In this way, GRPO entirely forgoes the critic network, using the group mean reward as an empirical baseline.

- **Critic-free advantage:** GRPO removes the value network entirely. The mean reward of the sampled group serves as a baseline, and the policy optimizes relative to this baseline. This eliminates the need to train a separate value function.
- **Surrogate PPO objective:** Aside from the baseline, GRPO follows PPO's framework: it applies a clipped surrogate loss (and often a KL penalty) on the likelihood ratio to stabilize updates. Thus it inherits PPO's stability mechanisms without the critic overhead.
- **Normalized group rewards:** By computing advantages via group-level normalization, GRPO can reduce variance in gradient estimates. Each candidate's performance is measured relative to its peers, encouraging the model to prefer outputs that consistently beat the group average.
- **Compute efficiency:** Empirically, GRPO cuts memory use roughly in half, since no backpropagation is done through a value model. The original GRPO paper reports that this simplification "significantly reduce[s] training resources" and yields large performance gains even with a subset of data.

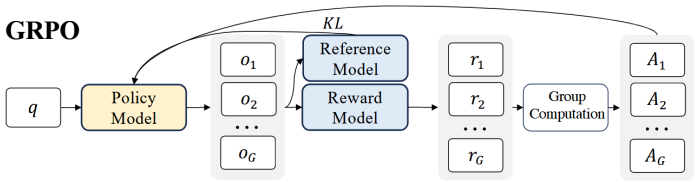

Figure 3: GRPO

2.3 Curriculum Sampling Strategy

To improve training efficiency under constrained computational budgets, curriculum sampling strategies have been proposed as an effective approach. Training directly on difficult tasks in the early stages often leads to low success rates and inefficient gradient updates, as the model lacks sufficient prior knowledge to learn from these challenging examples. To mitigate this, curriculum sampling organizes training data in a staged manner—starting with simpler examples and gradually increasing in difficulty as training progresses.

Recent work demonstrates the effectiveness of this approach in large-scale model training. For instance, Kimi K1.5 [2025] leverages a dataset naturally annotated with grade and difficulty levels to implement curriculum sampling, reporting improved model performance and faster convergence. Their results highlight the benefits of aligning training difficulty with model capability over time. However, the effectiveness of curriculum-based approaches can be task-dependent. Logic-RL [2025], which focuses on logical reasoning and puzzle-solving tasks, finds that curriculum sampling yields limited improvements. The study emphasizes the importance of balancing the added complexity of curriculum design with the actual performance gains, suggesting that the benefits may diminish for tasks that do not exhibit a clear progression in difficulty or where performance depends more heavily on global reasoning patterns.

3 Methodology

Our proposed framework consists of the following main stages: (1) data preparation, (2) training a cognitive diagnosis model, and (3) adaptive GRPO using CDM-based question selection.

3.1 Data Preparation

The original dataset consists of three fields: problem, problem type and answer. In order to train CDM, we call LLMs with different abilities to produce generations which are then scored by the same reward model to assign float-valued scores. As a result, the dataset is expanded to five fields: problem, problem type, answer, generation, and reward.

3.2 Cognitive Diagnosis Model

We construct the Q-matrix based on the problem type. Using the expanded dataset and the Q-matrix, we train the CDM to infer the knowledge difficulty(KD) associated with each problem. Additionally, at each GRPO step, we apply the CDM to assess the knowledge proficiency of the newly updated model.

3.3 CDM4GRPO

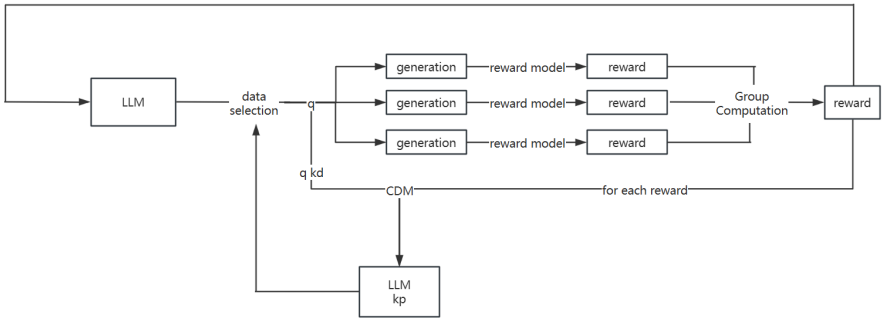

Figure 4: CDM4GRPO

At the end of each GRPO step, we obtain rewards evaluated by the reward model. Using these rewards, along with the knowledge difficulty (KD) and the Q-matrix of the selected problems, CDM infer the knowledge proficiency (KP) of the updated model. In the next round, we select questions whose knowledge difficulty aligns with the model's proficiency(e.g., The difference between KD and KP is within the specified range). The model then generates responses to these questions, and reward model evaluates the corresponding rewards. This process guides the model's progression toward a better proficiency state.

4 Experiment

We randomly select 1500 samples from openr1-math-220k as the original dataset. We conduct GRPO algorithm implemented in the unsloth framework, using Qwen2.5-3B as our initial policy model, for 250 steps [2024].

	base model	GRPO	CDM4GRPO
Accuracy (amc)	30%	32%	43%
Accuracy (math)	48%	49%	56%

Table 1: Results comparing base model, GRPO and CDM4GRPO on amc and math.

As illustrated in Table 1, CDM4GRPO outperforms the basemodel and GRPO in both AMC and math. As for the original GRPO, its instability is magnified in the case of a small number of dataset and has no obvious effect.

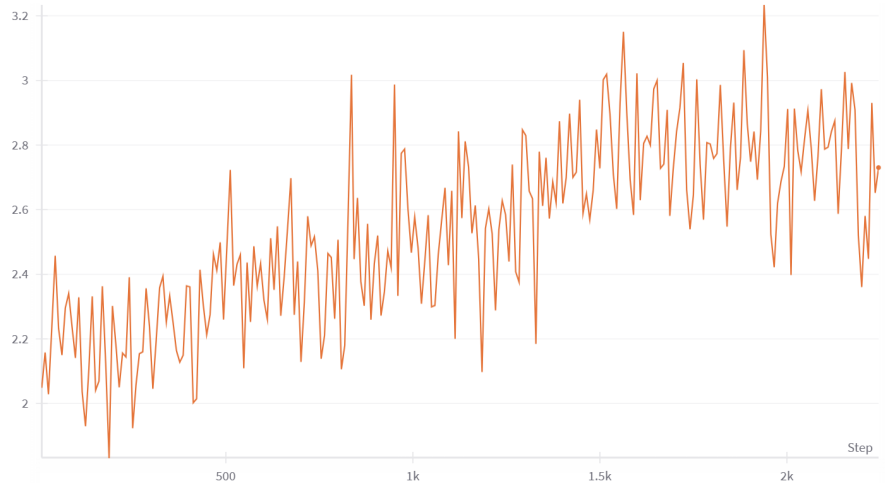

Figure 5: CDM4GRPO performance

5 Conclusion and Future Work

Previous work primarily focused on improving data selection before RL. In contrast, we propose CDM4GRPO to enhance data selection during RL by dynamically detecting and leveraging the knowledge proficiency of LLM and the knowledge difficulty of data with CDM. This approach reduces the computational resources required for RL while simultaneously improving final model performance. Moreover, the method mitigates one of the most critical issues in GRPO: instability.

When it comes to the future work, we can (1) refine the structure of the Q-matrix, (2) change dataset scale to see the effect change, (3) move from solving math problems to other tasks that are suitable for Q-matrix annotation, such as code, personality simulation and prediction.

References

Terry A Ackerman. Multidimensional item response theory models. *Wiley StatsRef: Statistics Reference Online*, 2014.

Yunxiao Chen, Xiaoou Li, Jingchen Liu, and Zhiliang Ying. Item response theory—a statistical framework for educational and psychological measurement. *Statistical Science*, 40(2):167–194, 2025.

Jimmy De La Torre. Dina model and parameter estimation: A didactic. *Journal of educational and behavioral statistics*, 34(1):115–130, 2009.

Daya Guo, Dejian Yang, Haowei Zhang, Junxiao Song, Ruoyu Zhang, Runxin Xu, Qihao Zhu, Shirong Ma, Peiyi Wang, Xiao Bi, et al. Deepseek-r1: Incentivizing reasoning capability in llms via reinforcement learning. *arXiv preprint arXiv:2501.12948*, 2025.

Aaron Jaech, Adam Kalai, Adam Lerer, Adam Richardson, Ahmed El-Kishky, Aiden Low, Alec Helyar, Aleksander Madry, Alex Beutel, Alex Carney, et al. Openai o1 system card. *arXiv preprint arXiv:2412.16720*, 2024.

Xuefeng Li, Haoyang Zou, and Pengfei Liu. LIMR: Less is More for RL Scaling, February 2025. URL `http://arxiv.org/abs/2502.11886`. arXiv:2502.11886 [cs].

ML Littman and AW Moore. Reinforcement learning: A survey, journal of artificial intelligence research 4, 1996.

Qwen, An Yang, Baosong Yang, Beichen Zhang, Binyuan Hui, Bo Zheng, Bowen Yu, Chengyuan Li, Dayiheng Liu, Fei Huang, Haoran Wei, Huan Lin, Jian Yang, Jianhong Tu, Jianwei Zhang, Jianxin Yang, Jiaxi Yang, Jingren Zhou, Junyang Lin, Kai Dang, Keming Lu, Keqin Bao, Kexin Yang, Le Yu, Mei Li, Mingfeng Xue, Pei Zhang, Qin Zhu, Rui Men, Runji Lin, Tianhao Li, Tianyi Tang, Tingyu Xia, Xingzhang Ren, Xuancheng Ren, Yang Fan, Yang Su, Yichang Zhang, Yu Wan, Yuqiong Liu, Zeyu Cui, Zhenru Zhang, and Zihan Qiu. Qwen2.5 Technical Report, December 2024. URL `https://arxiv.org/abs/2412.15115v2`.

Rafael Rafailov, Archit Sharma, Eric Mitchell, Christopher D Manning, Stefano Ermon, and Chelsea Finn. Direct preference optimization: Your language model is secretly a reward model. *Advances in Neural Information Processing Systems*, 36:53728–53741, 2023.

John Schulman, Filip Wolski, Prafulla Dhariwal, Alec Radford, and Oleg Klimov. Proximal policy optimization algorithms. *arXiv preprint arXiv:1707.06347*, 2017.

Zhihong Shao, Peiyi Wang, Qihao Zhu, Runxin Xu, Junxiao Song, Xiao Bi, Haowei Zhang, Mingchuan Zhang, Y. K. Li, Y. Wu, and Daya Guo. DeepSeekMath: Pushing the Limits of Mathematical Reasoning in Open Language Models, April 2024. URL `http://arxiv.org/abs/2402.03300`. arXiv:2402.03300 [cs].

Richard S Sutton, Andrew G Barto, et al. Reinforcement learning. *Journal of Cognitive Neuroscience*, 11(1):126–134, 1999.

Kimi Team, Angang Du, Bofei Gao, Bowei Xing, Changjiu Jiang, Cheng Chen, Cheng Li, Chenjun Xiao, Chenzhuang Du, Chonghua Liao, et al. Kimi k1. 5:

Scaling reinforcement learning with llms. *arXiv preprint arXiv:2501.12599*, 2025.

Fei Wang, Qi Liu, Enhong Chen, Zhenya Huang, Yu Yin, Shijin Wang, and Yu Su. NeuralCD: A General Framework for Cognitive Diagnosis. *IEEE Transactions on Knowledge and Data Engineering*, 35(8):8312–8327, August 2023. ISSN 1041-4347, 1558-2191, 2326-3865. doi: 10.1109/TKDE.2022.3201037. URL `https://ieeexplore.ieee.org/document/9865139/`.

Xin Wang, Yudong Chen, and Wenwu Zhu. A survey on curriculum learning. *IEEE transactions on pattern analysis and machine intelligence*, 44(9):4555–4576, 2021.

Tian Xie, Zitian Gao, Qingnan Ren, Haoming Luo, Yuqian Hong, Bryan Dai, Joey Zhou, Kai Qiu, Zhirong Wu, and Chong Luo. Logic-rl: Unleashing llm reasoning with rule-based reinforcement learning. *arXiv preprint arXiv:2502.14768*, 2025.

Yixin Ye, Zhen Huang, Yang Xiao, Ethan Chern, Shijie Xia, and Pengfei Liu. Limo: Less is more for reasoning. *arXiv preprint arXiv:2502.03387*, 2025.

Chunting Zhou, Pengfei Liu, Puxin Xu, Srinivasan Iyer, Jiao Sun, Yuning Mao, Xuezhe Ma, Avia Efrat, Ping Yu, Lili Yu, et al. Lima: Less is more for alignment. *Advances in Neural Information Processing Systems*, 36:55006–55021, 2023.

Yan Zhuang, Qi Liu, Zachary A. Pardos, Patrick C. Kyllonen, Jiyun Zu, Zhenya Huang, Shijin Wang, and Enhong Chen. Position: AI Evaluation Should Learn from How We Test Humans, May 2025. URL `http://arxiv.org/abs/2306.10512`. arXiv:2306.10512 [cs] version: 4.