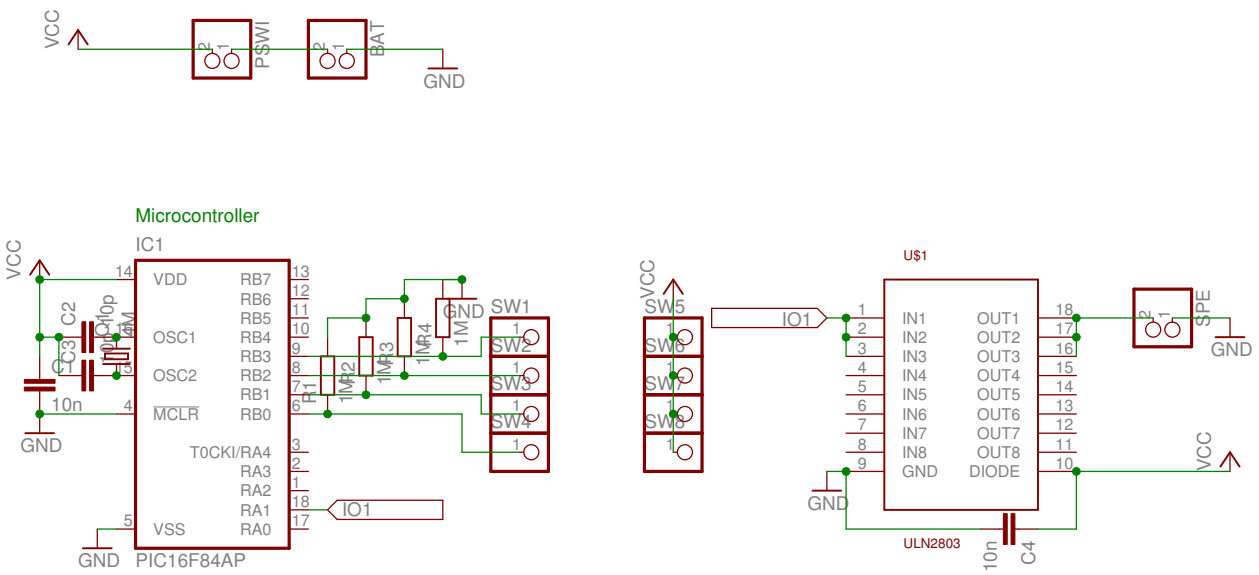
VCC
PSWI
BAT
GND
Microcontroller
IC1
VDD
OSC1
OSC2
MCLR
VSS
RB7
RB6
RB5
RB4
RB3
RB2
RB1
RB0
T0CKI/RA4
RA3
RA2
RA1
RA0
C2
C3
10n
R1
1M
SW1
SW2
SW3
SW4
IO1
PIC16F84AP
SW5
SW6
SW7
SW8
U$1
IN1
IN2
IN3
IN4
IN5
IN6
IN7
IN8
GND
OUT1
OUT2
OUT3
OUT4
OUT5
OUT6
OUT7
OUT8
DIODE
SPE
ULN2803
C4