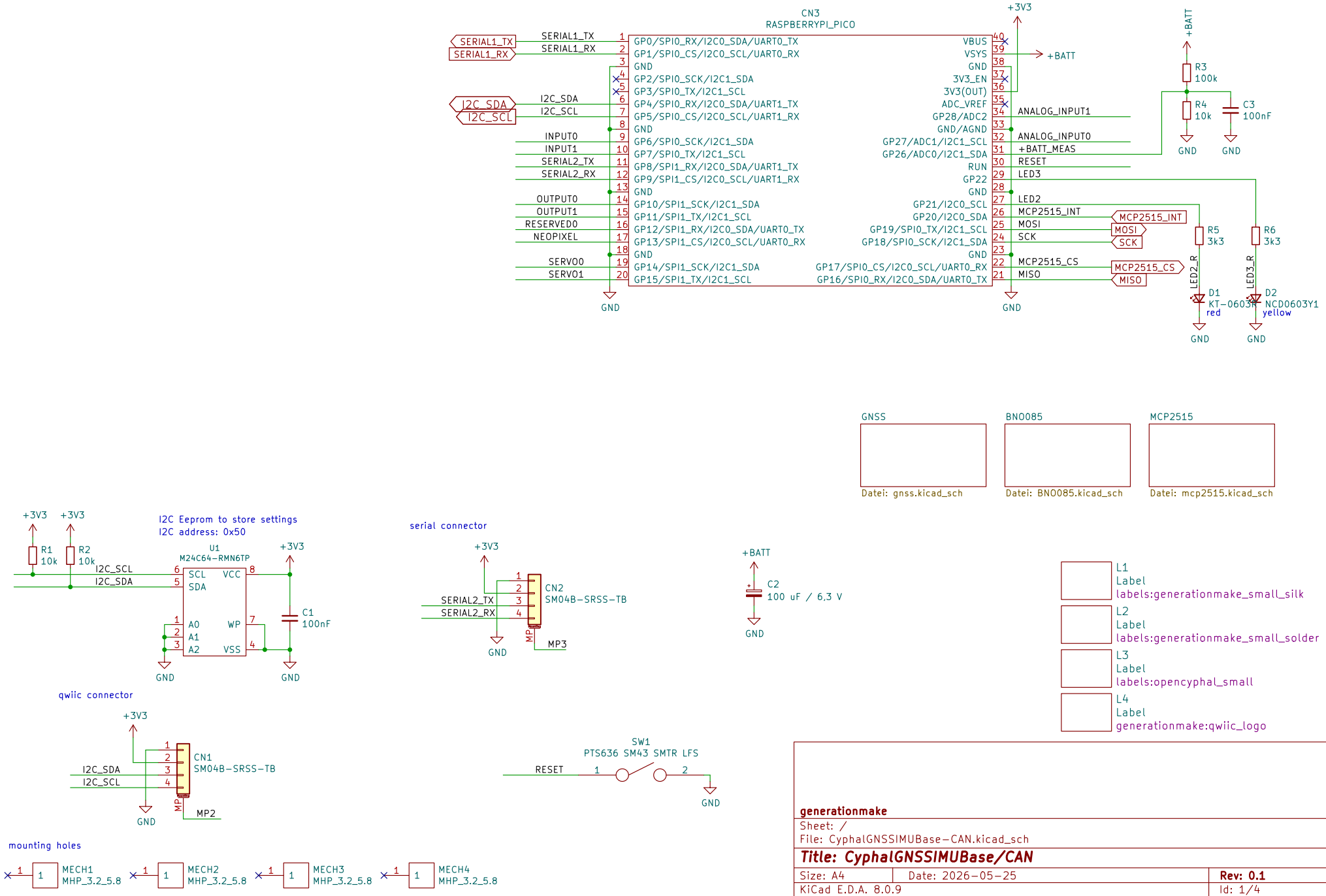
CN3
RASPBERRYPI_PICO
SERIAL1_TX
SERIAL1_RX
I2C_SDA
I2C_SCL
INPUT0
INPUT1
SERIAL2_TX
SERIAL2_RX
OUTPUT0
OUTPUT1
RESERVED0
NEOPIXEL
SERVO0
SERVO1
GP0/SPI0_RX/I2C0_SDA/UART0_TX
GP1/SPI0_CS/I2C0_SCL/UART0_RX
GND
GP2/SPI0_SCK/I2C1_SDA
GP3/SPI0_TX/I2C1_SCL
GP4/SPI0_RX/I2C0_SDA/UART1_TX
GP5/SPI0_CS/I2C0_SCL/UART1_RX
GND
GP6/SPI0_SCK/I2C1_SDA
GP7/SPI0_TX/I2C1_SCL
GP8/SPI1_RX/I2C0_SDA/UART1_TX
GP9/SPI1_CS/I2C0_SCL/UART1_RX
GND
GP10/SPI1_SCK/I2C1_SDA
GP11/SPI1_TX/I2C1_SCL
GP12/SPI1_RX/I2C0_SDA/UART0_TX
GP13/SPI1_CS/I2C0_SCL/UART0_RX
GND
GP14/SPI1_SCK/I2C1_SDA
GP15/SPI1_TX/I2C1_SCL
VBUS
VSYS
GND
3V3_EN
3V3(OUT)
ADC_VREF
GP28/ADC2
GND/AGND
GP27/ADC1/I2C1_SCL
GP26/ADC0/I2C1_SDA
RUN
GP22
GND
GP21/I2C0_SCL
GP20/I2C0_SDA
GP19/SPI0_TX/I2C1_SCL
GP18/SPI0_SCK/I2C1_SDA
GND
GP17/SPI0_CS/I2C0_SCL/UART0_RX
GP16/SPI0_RX/I2C0_SDA/UART0_TX
+3V3
+BATT
ANALOG_INPUT1
ANALOG_INPUT0
+BATT_MEAS
RESET
LED3
LED2
MCP2515_INT
MOSI
SCK
MCP2515_CS
MISO
R3
100k
R4
10k
C3
100nF
R5
3k3
R6
3k3
LED2_R
LED3_R
D1
KT-0603R
red
D2
NCD0603Y1
yellow
GND
GNSS
Datei: gnss.kicad_sch
BNO085
Datei: BNO085.kicad_sch
MCP2515
Datei: mcp2515.kicad_sch
R1
10k
R2
10k
I2C Eeprom to store settings
I2C address: 0x50
U1
M24C64-RMN6TP
SCL
SDA
VCC
A0
A1
A2
WP
VSS
C1
100nF
serial connector
CN2
SM04B-SRSS-TB
MP3
C2
100 uF / 6,3 V
L1
Label
labels:generationmake_small_silk
L2
Label
labels:generationmake_small_solder
L3
Label
labels:opencyphal_small
L4
Label
generationmake:qwiic_logo
qwiic connector
CN1
SM04B-SRSS-TB
MP2
SW1
PTS636 SM43 SMTR LFS
mounting holes
MECH1
MHP_3.2_5.8
MECH2
MHP_3.2_5.8
MECH3
MHP_3.2_5.8
MECH4
MHP_3.2_5.8
generationmake
Sheet: /
File: CyphalGNSSIMUBase-CAN.kicad_sch
Title: CyphalGNSSIMUBase/CAN
Size: A4
Date: 2026-05-25
Rev: 0.1
KiCad E.D.A. 8.0.9
Id: 1/4

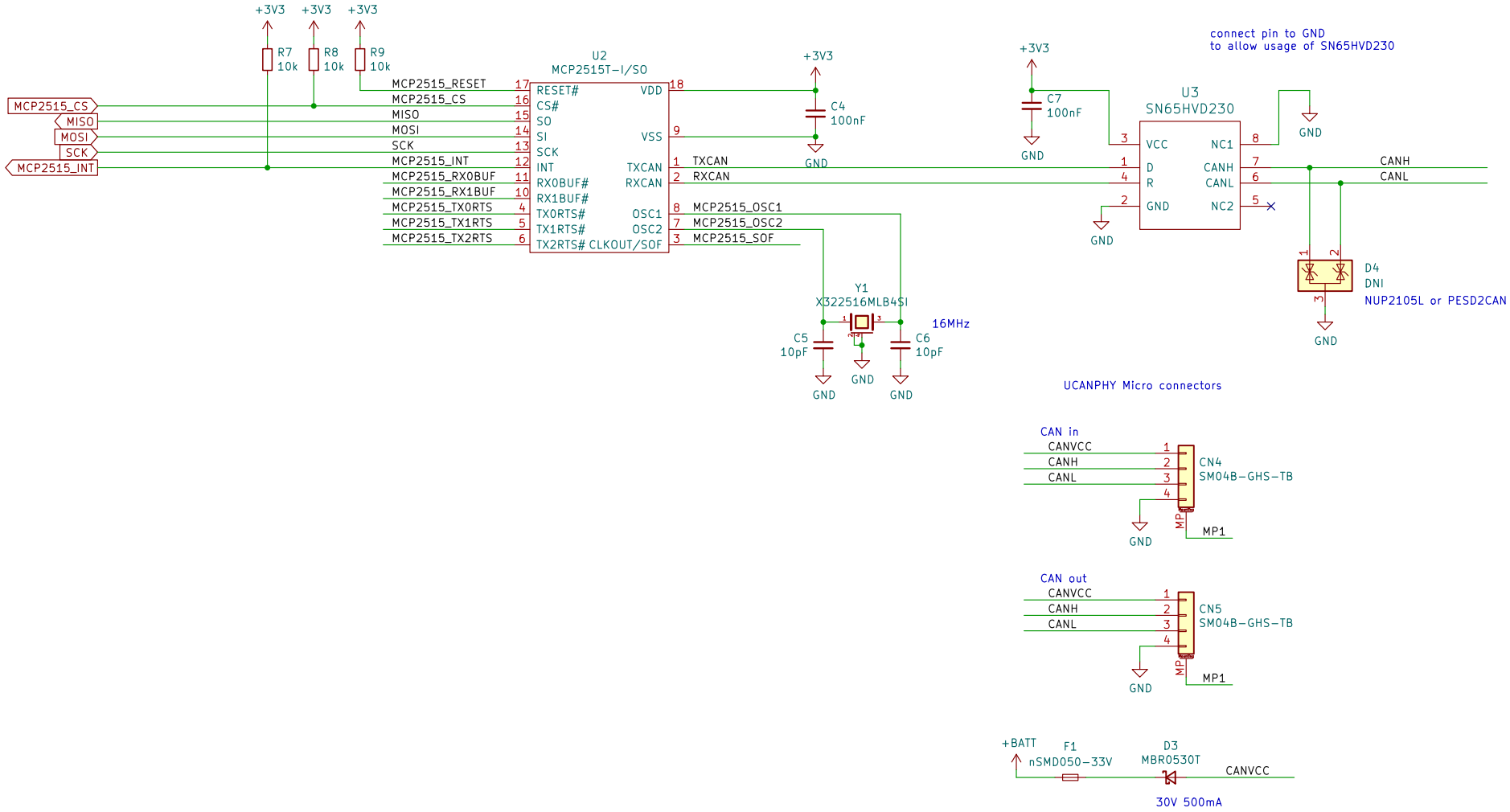

generationmake

Sheet: /MCP2515/

File: mcp2515.kicad_sch

Title: CyphalGNSSIMUBase/CAN

Size: A4	Date: 2026-05-25	**Rev: 0.1**
KiCad E.D.A. 8.0.9		Id: 2/4

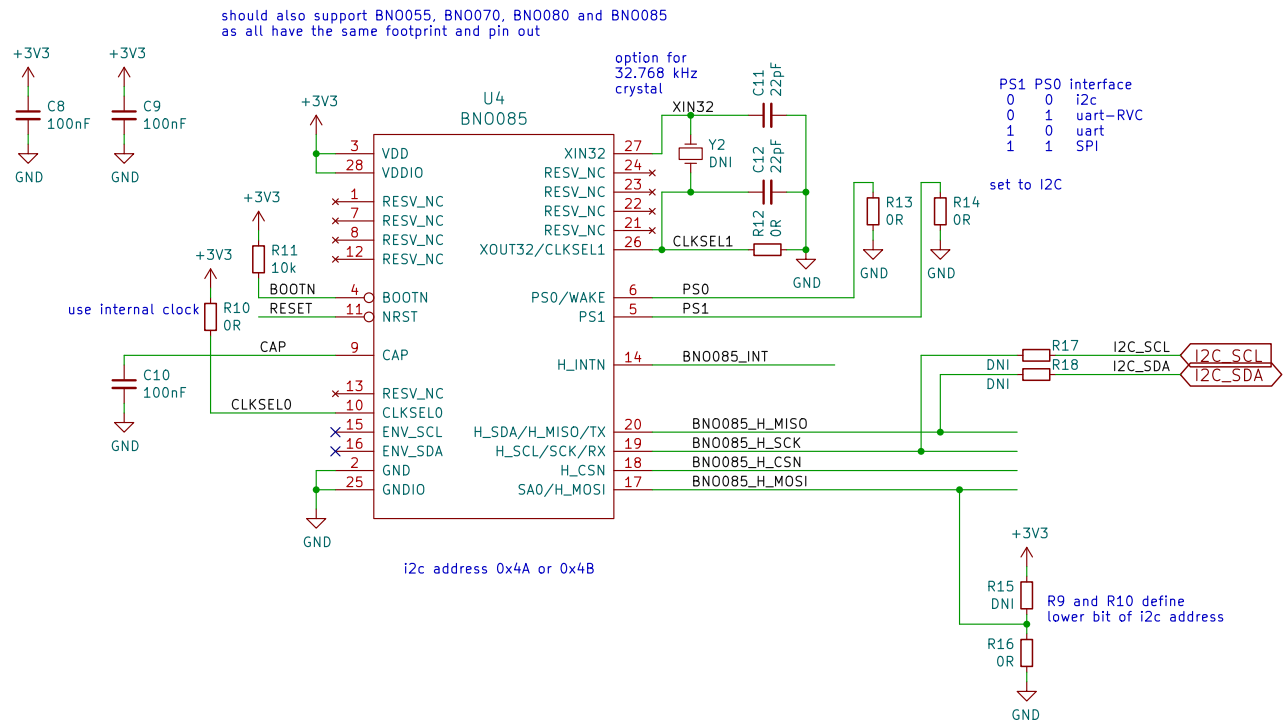

generationmake

Sheet: /BNO085/
File: BNO085.kicad_sch

Title: CyphalGNSSIMUBase/CAN

Size: A4	Date: 2026-05-25	**Rev: 0.1**
KiCad E.D.A. 8.0.9		Id: 3/4

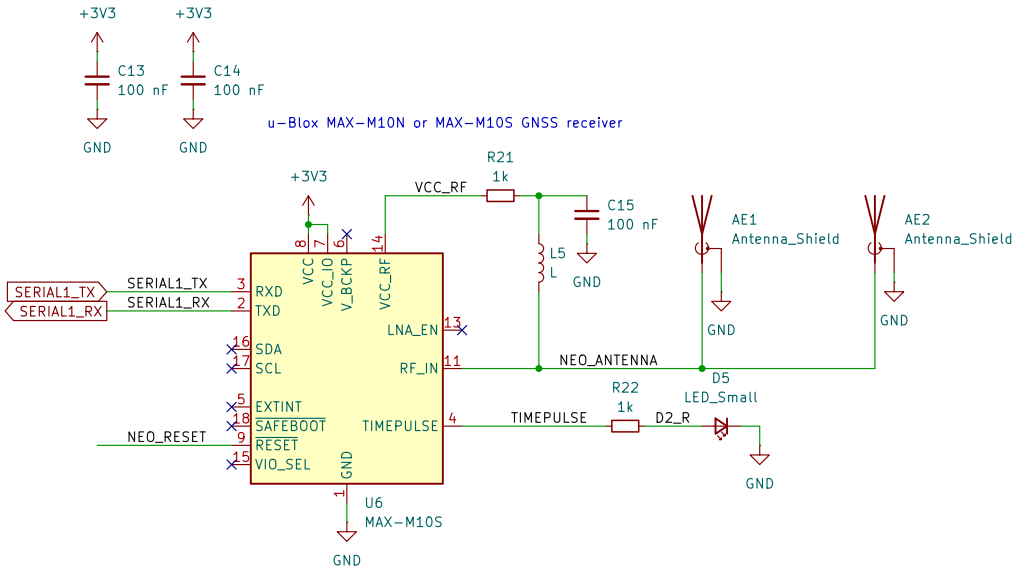

generationmake

Sheet: /GNSS/
File: gnss.kicad_sch

Title: CyphalGNSSIMUBase/CAN

Size: A4	Date: 2026-05-25	**Rev: 0.1**
KiCad E.D.A. 8.0.9		Id: 4/4