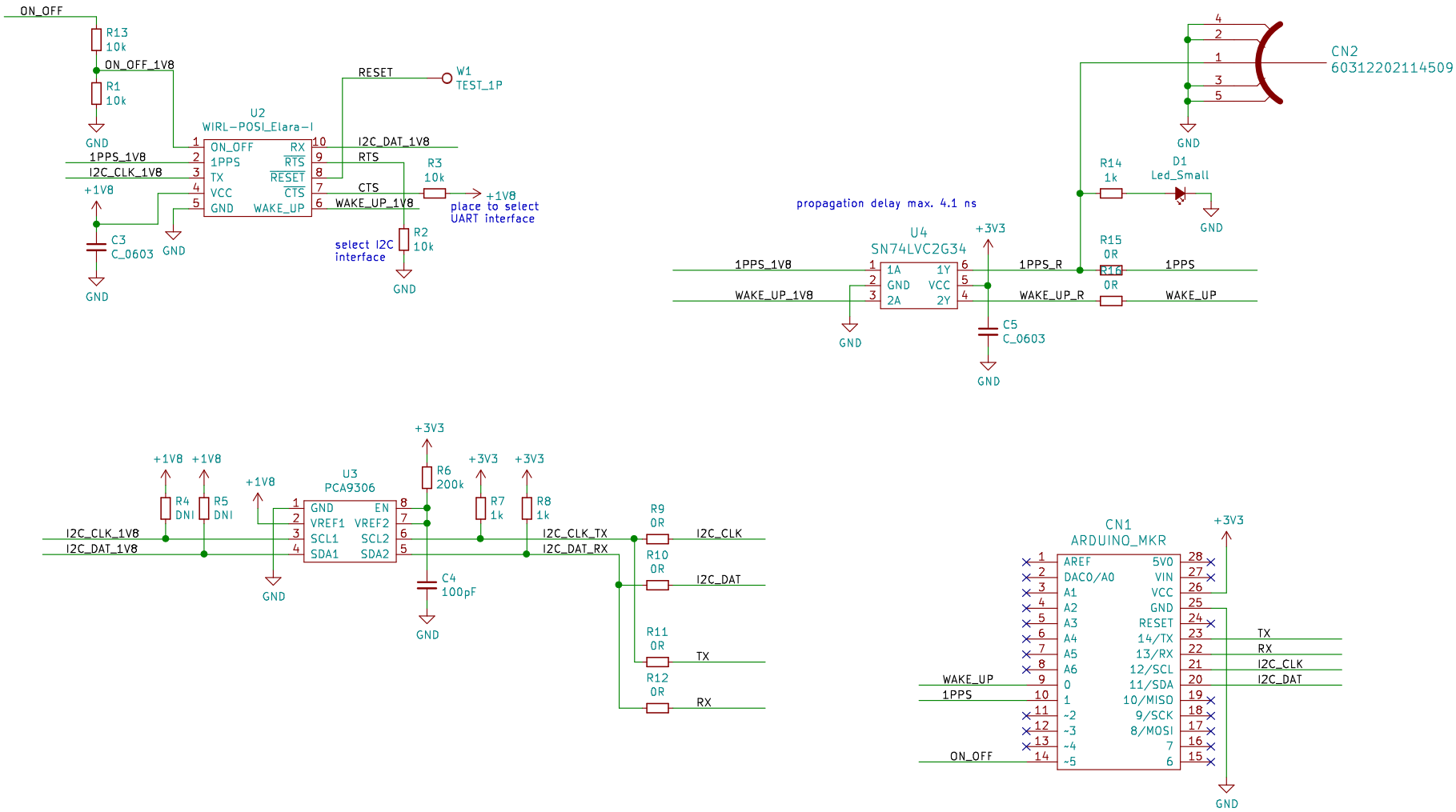

generationmake

Sheet: /

File: ElaraGNSSMKRShield.sch

Title: ElaraGNSSMKRShield

Size: A4	Date: 2020-11-15	Rev: 0.1
KiCad E.D.A. kicad 5.1.7-a382d34a887ubuntu18.04.1		Id: 1/1