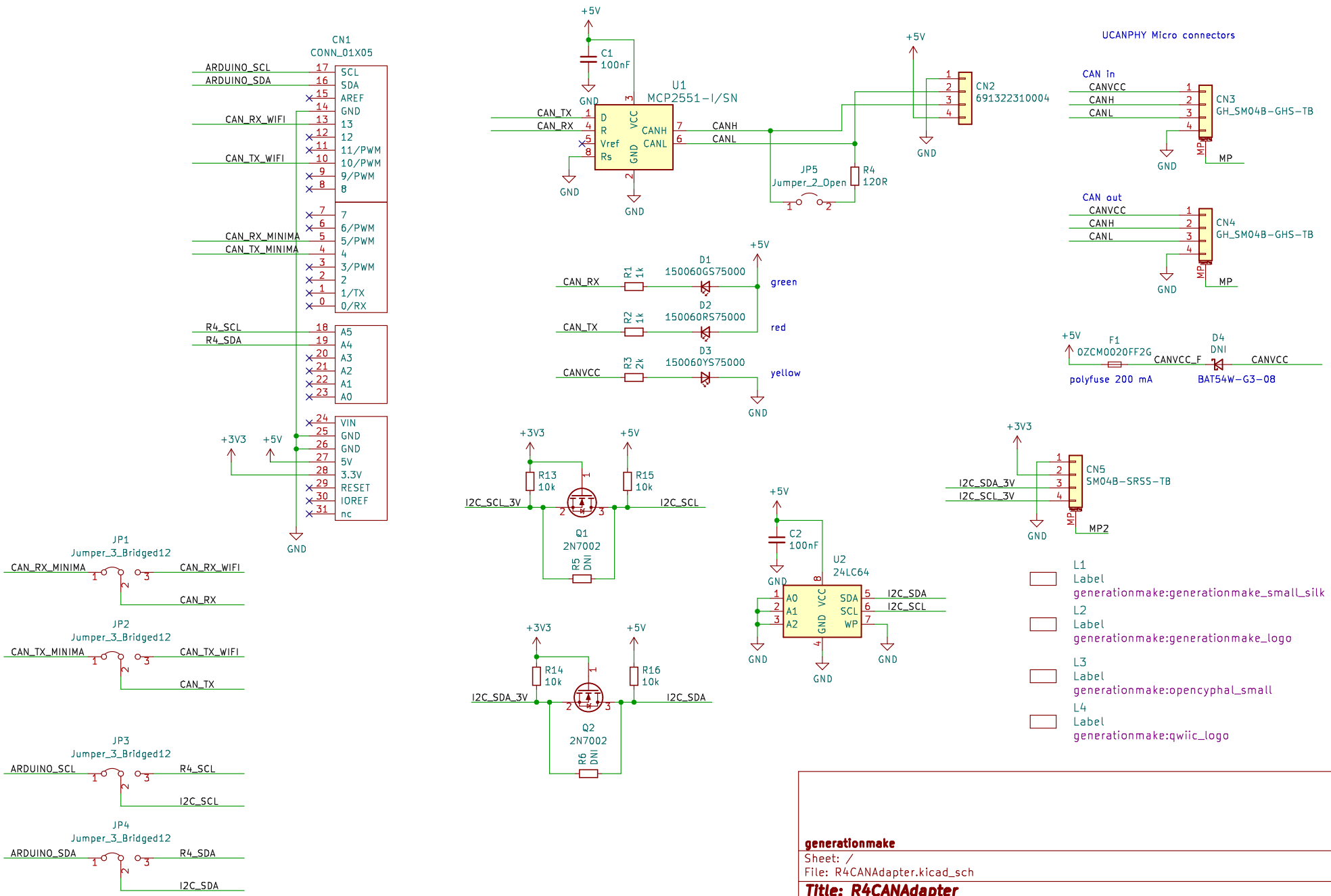
CN1
CONN_01X05
ARDUINO_SCL
ARDUINO_SDA
CAN_RX_WIFI
CAN_TX_WIFI
CAN_RX_MINIMA
CAN_TX_MINIMA
R4_SCL
R4_SDA
SCL
SDA
AREF
GND
13
12
11/PWM
10/PWM
9/PWM
8
7
6/PWM
5/PWM
4
3/PWM
2
1/TX
0/RX
A5
A4
A3
A2
A1
A0
VIN
GND
GND
5V
3.3V
RESET
IOREF
nc
+3V3
+5V
GND
C1
100nF
U1
MCP2551-I/SN
CAN_TX
CAN_RX
D
R
Vref
Rs
VCC
GND
CANH
CANL
JP5
Jumper_2_Open
R4
120R
CN2
691322310004
UCANPHY Micro connectors
CAN in
CANVCC
CANH
CANL
CN3
GH_SM04B-GHS-TB
MP
CAN out
CN4
GH_SM04B-GHS-TB
R1
1k
D1
150060GS75000
green
R2
1k
D2
150060RS75000
red
R3
2k
D3
150060YS75000
yellow
F1
0ZCM0020FF2G
polyfuse 200 mA
CANVCC_F
D4
DNI
BAT54W-G3-08
R13
10k
R15
10k
I2C_SCL_3V
I2C_SCL
Q1
2N7002
R5
DNI
C2
100nF
U2
24LC64
A0
A1
A2
SDA
SCL
WP
I2C_SDA
CN5
SM04B-SRSS-TB
I2C_SDA_3V
MP2
R14
10k
R16
10k
Q2
2N7002
R6
DNI
JP1
Jumper_3_Bridged12
CAN_RX_MINIMA
CAN_RX_WIFI
CAN_RX
JP2
Jumper_3_Bridged12
CAN_TX_MINIMA
CAN_TX_WIFI
CAN_TX
JP3
Jumper_3_Bridged12
ARDUINO_SCL
R4_SCL
I2C_SCL
JP4
Jumper_3_Bridged12
ARDUINO_SDA
R4_SDA
I2C_SDA
L1
Label
generationmake:generationmake_small_silk
L2
Label
generationmake:generationmake_logo
L3
Label
generationmake:opencyphal_small
L4
Label
generationmake:qwiic_logo
generationmake
Sheet: /
File: R4CANAdapter.kicad_sch
Title: R4CANAdapter
Size: A4
Date: 2023-08-18
Rev: 0.1
KiCad E.D.A. kicad 6.0.11-2627ca5db0~126~ubuntu22.04.1
Id: 1/1