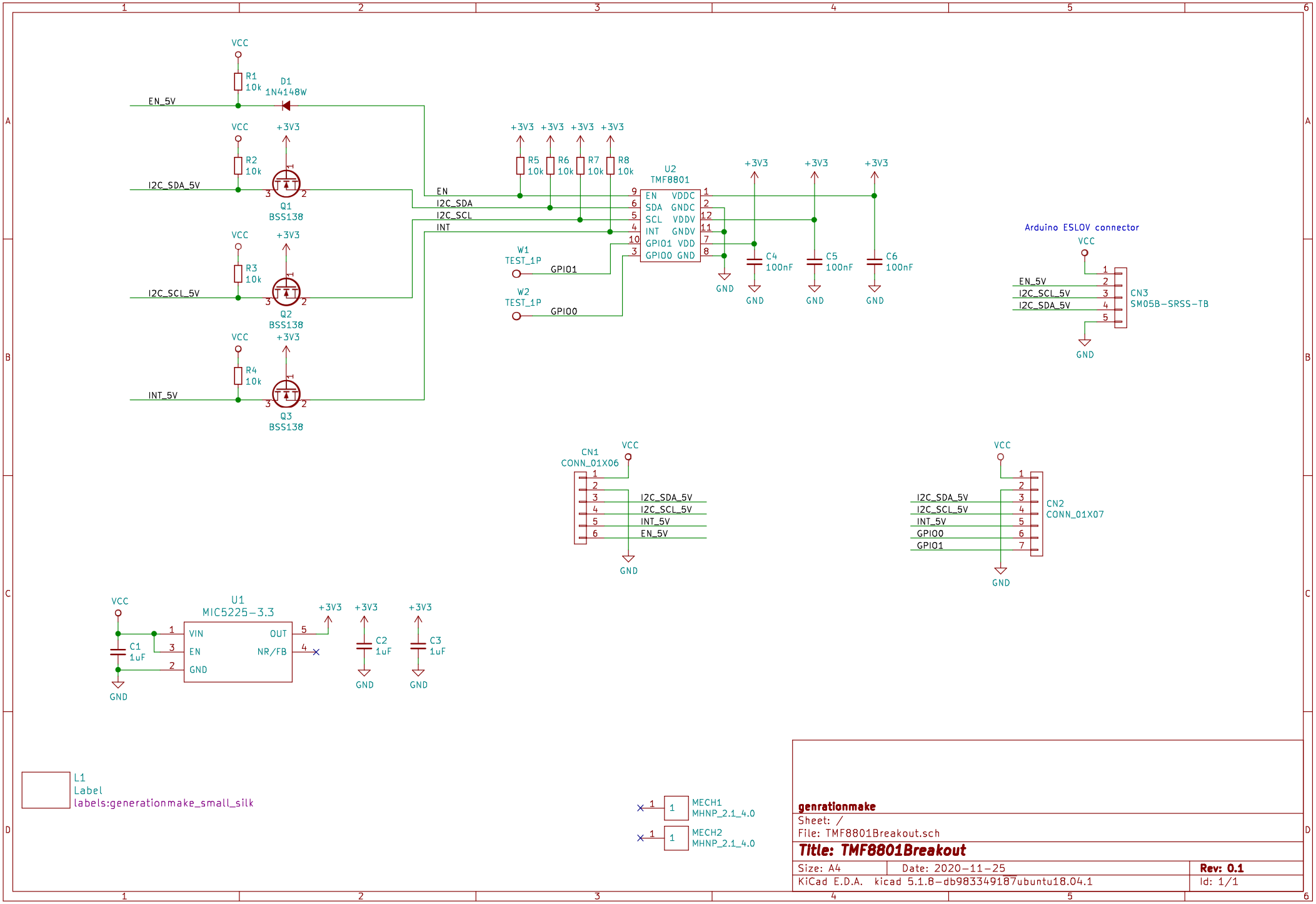

genrationmake

Sheet: /

File: TMF8801Breakout.sch

Title: TMF8801Breakout

Size: A4	Date: 2020-11-25	**Rev: 0.1**
KiCad E.D.A. kicad 5.1.8-db983349187ubuntu18.04.1		Id: 1/1