Copyright generationmake 2018
see full project documentation at http://ardutrx.generationmake.de

Arduino Uno: SCK=13 MOSI=11
Arduino Leonardo: no spi
Arduino Mega: no spi
Arduino M0 pro: SCK=13 MOSI=11
Arduino Zero: SCK=13 MOSI=11

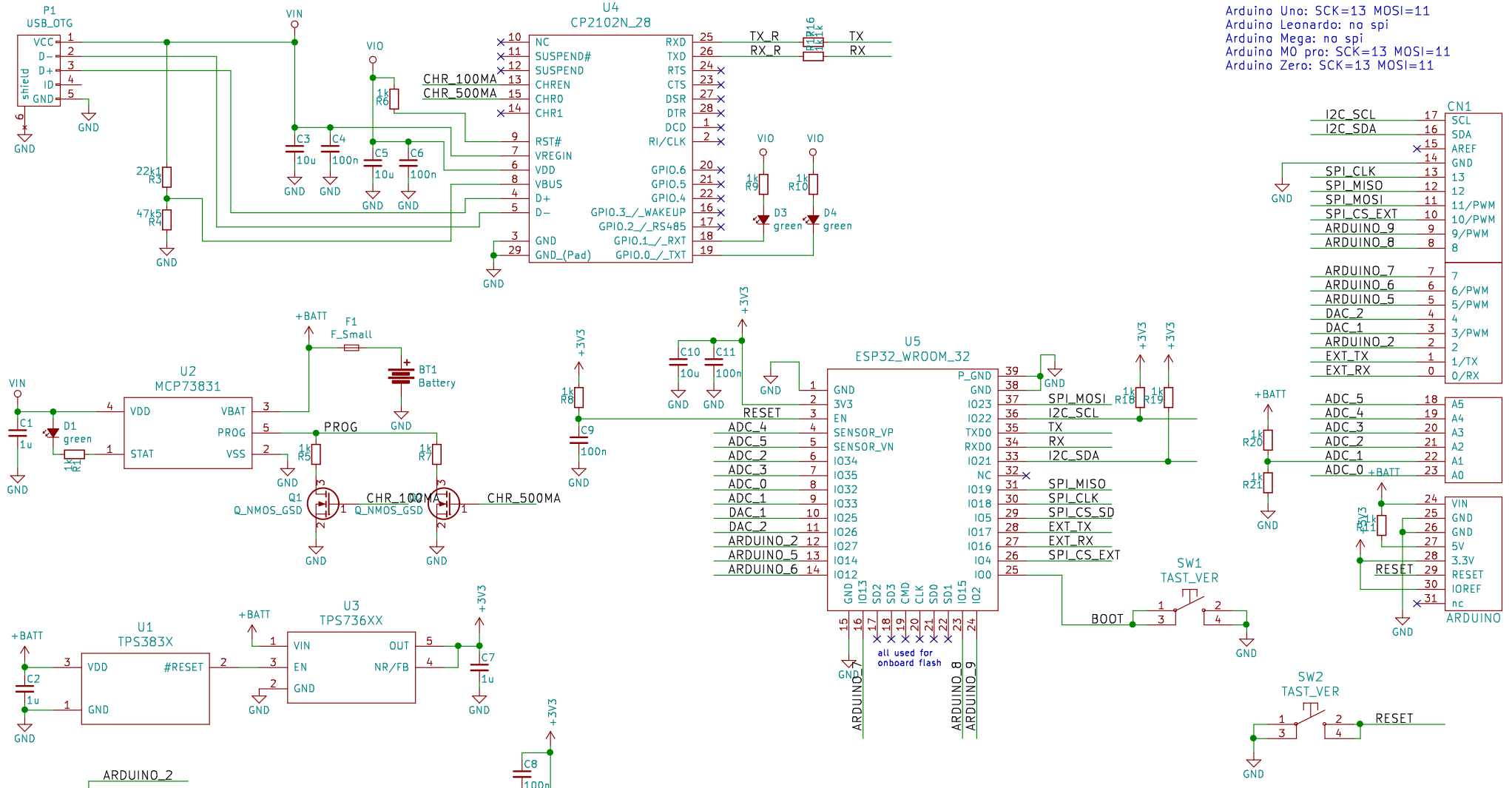

This documentation describes Open Hardware and is licensed under the CERN OHL v. 1.2.
You may redistribute and modify this documentation under the terms of the CERN OHL v.1.2. (http://ohwr.org/cernohl).
This documentation is distributed WITHOUT ANY EXPRESS OR IMPLIED WARRANTY, INCLUDING OF MERCHANTABILITY, SATISFACTORY QUALITY AND FITNESS FOR A PARTICULAR PURPOSE. Please see the CERN OHL v.1.2 for applicable conditions

generationmake

Sheet: /
File: esp32-arduino.sch

Title: esp32 arduino

Size: A4	Date: 2018-12-12	Rev: 1.0
KiCad E.D.A. kicad 5.0.2-bee76a070ubuntu18.04.1		Id: 1/1