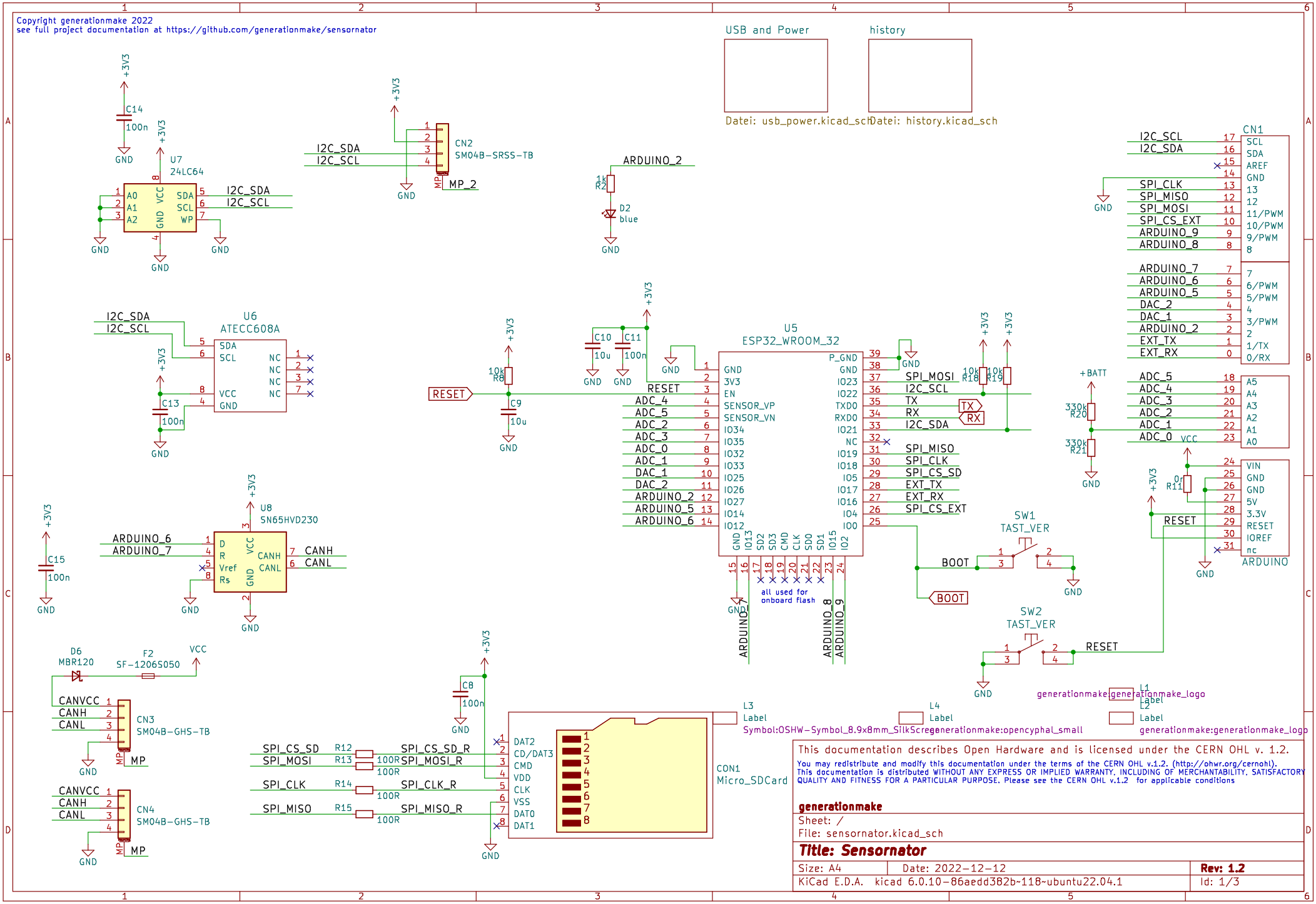
Copyright generationmake 2022
see full project documentation at https://github.com/generationmake/sensornator
USB and Power
Datei: usb_power.kicad_sch
history
Datei: history.kicad_sch
U7
24LC64
C14
100n
I2C_SDA
I2C_SCL
CN2
SM04B-SRSS-TB
MP_2
ARDUINO_2
D2
blue
U6
ATECC608A
C13
100n
U8
SN65HVD230
ARDUINO_6
ARDUINO_7
CANH
CANL
C15
100n
U5
ESP32_WROOM_32
RESET
C9
10u
C10
10u
C11
100n
all used for
onboard flash
SPI_MOSI
SPI_MISO
SPI_CLK
SPI_CS_SD
EXT_TX
EXT_RX
SPI_CS_EXT
SW1
TAST_VER
SW2
TAST_VER
BOOT
CN1
ARDUINO
+BATT
D6
MBR120
F2
SF-1206S050
VCC
CANVCC
CN3
SM04B-GHS-TB
CN4
SM04B-GHS-TB
MP
C8
100n
SPI_CS_SD_R
SPI_MOSI_R
SPI_CLK_R
SPI_MISO_R
CON1
Micro_SDCard
L3
Label
Symbol:OSHW-Symbol_8.9x8mm_SilkScreen
L4
Label
generationmake:opencyphal_small
L1
Label
generationmake:generationmake_logo
L2
Label
generationmake:generationmake_logo
This documentation describes Open Hardware and is licensed under the CERN OHL v. 1.2.
You may redistribute and modify this documentation under the terms of the CERN OHL v.1.2. (http://ohwr.org/cernohl).
This documentation is distributed WITHOUT ANY EXPRESS OR IMPLIED WARRANTY, INCLUDING OF MERCHANTABILITY, SATISFACTORY QUALITY AND FITNESS FOR A PARTICULAR PURPOSE. Please see the CERN OHL v.1.2 for applicable conditions
generationmake
Sheet: /
File: sensornator.kicad_sch
Title: Sensornator
Size: A4
Date: 2022-12-12
Rev: 1.2
KiCad E.D.A. kicad 6.0.10-86aedd382b~118~ubuntu22.04.1
Id: 1/3

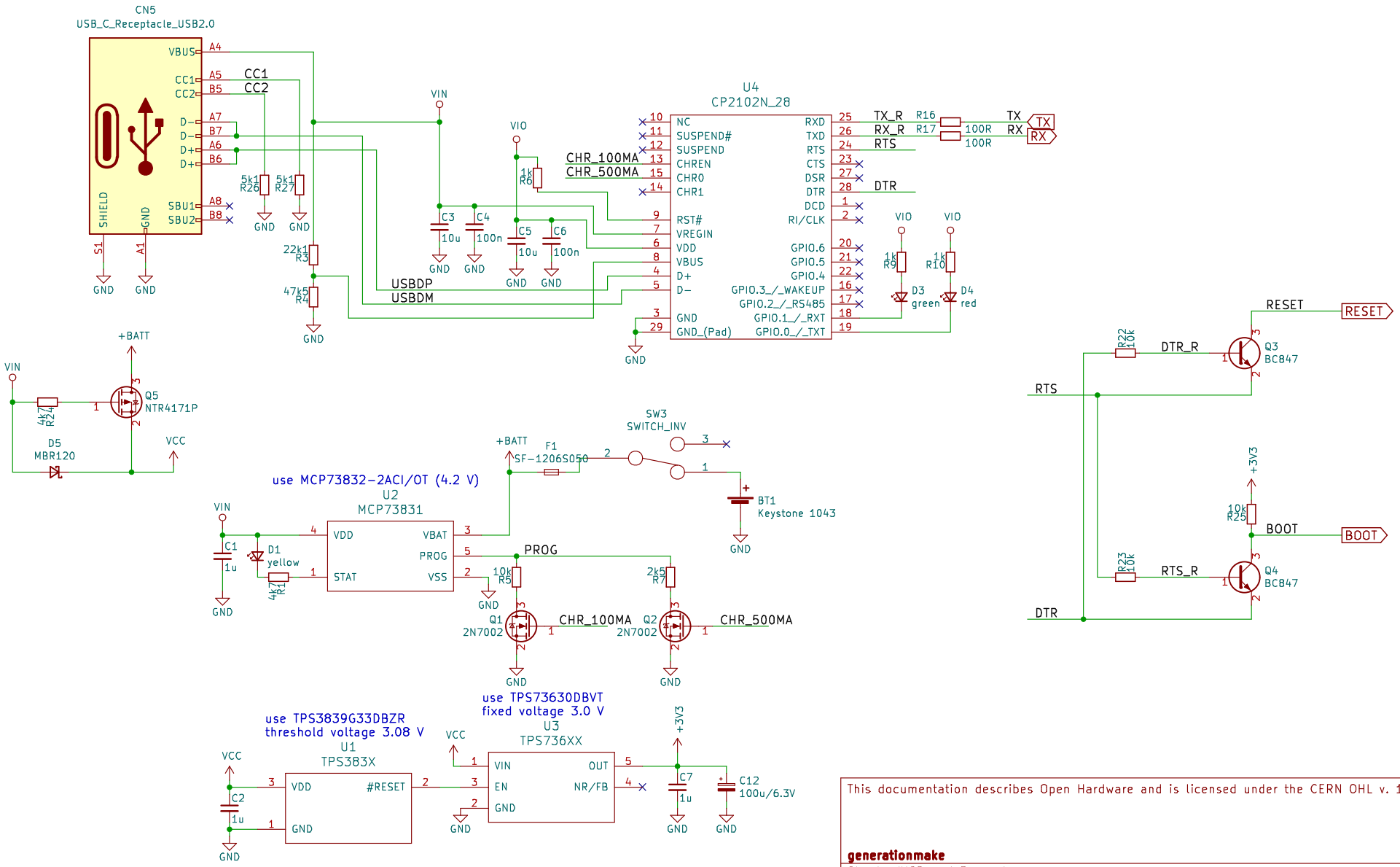

This documentation describes Open Hardware and is licensed under the CERN OHL v. 1.2.

generationmake

Sheet: /USB and Power/
File: usb_power.kicad_sch

Title: Sensornator

Size: A4	Date: 2022-12-12	**Rev: 1.2**
KiCad E.D.A. kicad 6.0.10-86aedd382b~118~ubuntu22.04.1		Id: 2/3

version	date	name	description
1.0	2018-12-12	Bernhard Mayer	initial release
1.1	2019-04-12	Bernhard Mayer	disconnected pin 4 of U3
	2019-04-12	Bernhard Mayer	added ESP32 reset circuit (Q3 and Q4)
	2019-04-12	Bernhard Mayer	changed micro SD card socket to push pull type
	2019-04-12	Bernhard Mayer	added polarized capacitor (C12) to stabilze 3.0 V rail
	2019-04-12	Bernhard Mayer	added switch (SW3) to cut off battery
	2019-04-12	Bernhard Mayer	added ATECC608A (U6)
	2019-04-12	Bernhard Mayer	added USB battery power bypass circuit (Q5)
	2021-01-22	Bernhard Mayer	changed C9 to 10uF (Reset)
1.2	2022-11-01	Bernhard Mayer	added pull up on BOOT (R25)
	2022-11-01	Bernhard Mayer	added I2C qwiic connector (CN2)
	2022-11-01	Bernhard Mayer	added I2C eeprom (U7)
	2022-11-01	Bernhard Mayer	added CAN transceiver (U8, CN3 and CN4)
	2022-11-02	Bernhard Mayer	switched to USB C connector (CN5)
	2022-11-27	Bernhard Mayer	added resistors to USB CC pins (R26 and R27)
	2022-12-12	Bernhard Mayer	added mounting pads to connectors and labels

This documentation describes Open Hardware and is licensed under the CERN OHL v. 1.2.

generationmake

Sheet: /history/
File: history.kicad_sch

Title: Sensornator

Size: A4	Date: 2022-12-12	**Rev: 1.2**
KiCad E.D.A. kicad 6.0.10-86aedd382b~118~ubuntu22.04.1		Id: 3/3