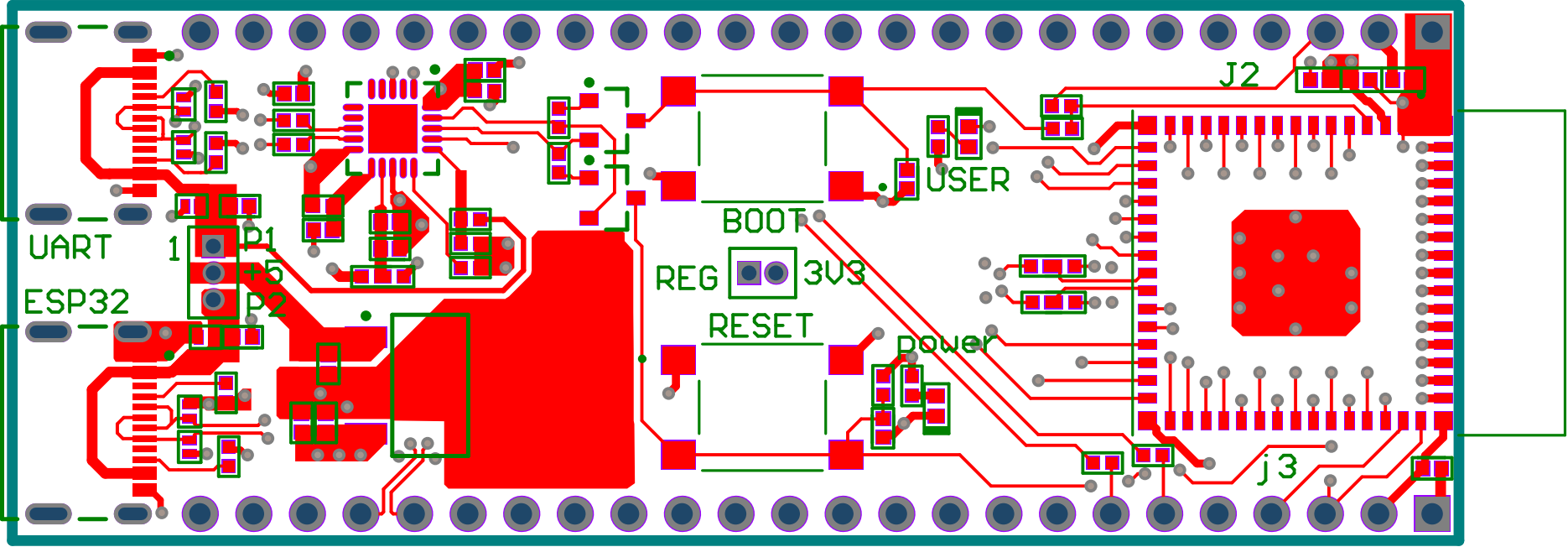
UART
ESP32
1
P1
+5
P2
BOOT
REG
3V3
RESET
USER
Power
J2
j3

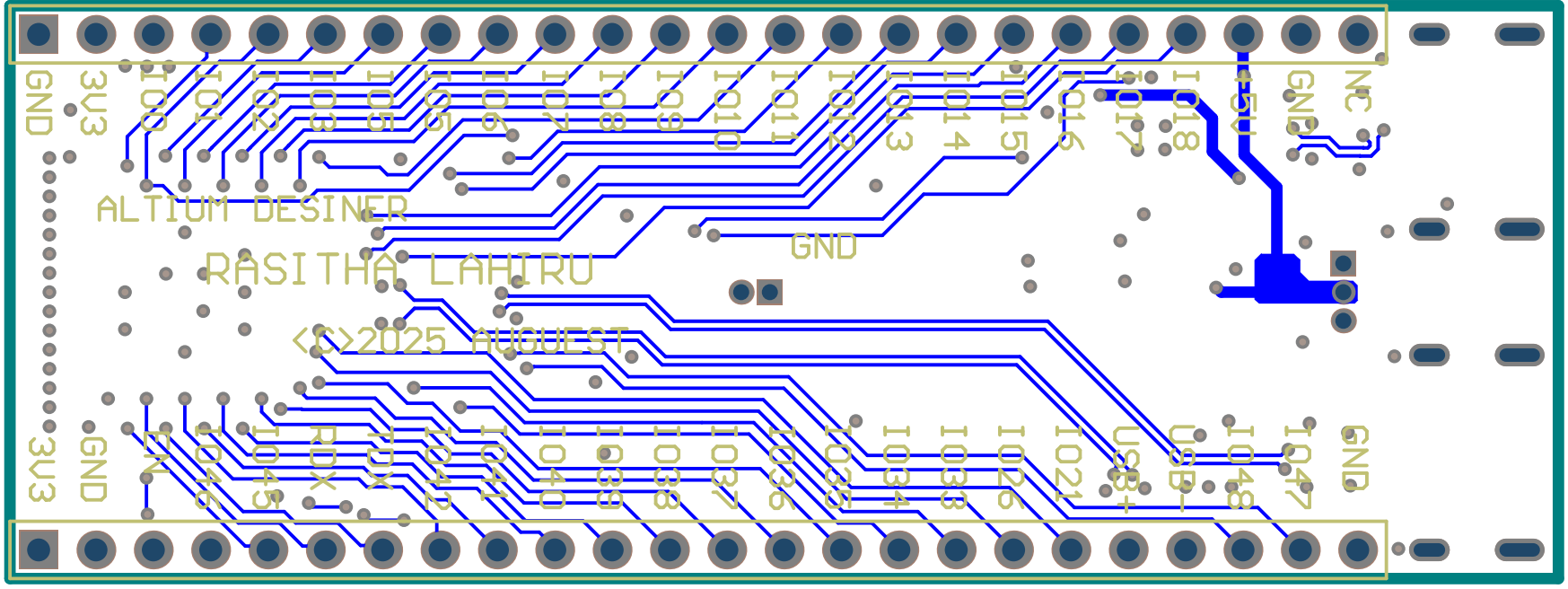
GND
3V3
IO0
IO1
IO2
IO3
IO4
IO5
IO6
IO7
IO8
IO9
IO10
IO11
IO12
IO13
IO14
IO15
IO16
IO17
IO18
EN
GND
NC
ALTIUM DESINER
RASITHA LAHIRU
GND
<©>2025 AUGUEST
3V3
GND
IO45
IO46
RDX
TDX
IO42
IO41
IO40
IO39
IO38
IO37
IO36
IO35
IO34
IO33
IO21
USB+
USB-
IO48
IO47
GND

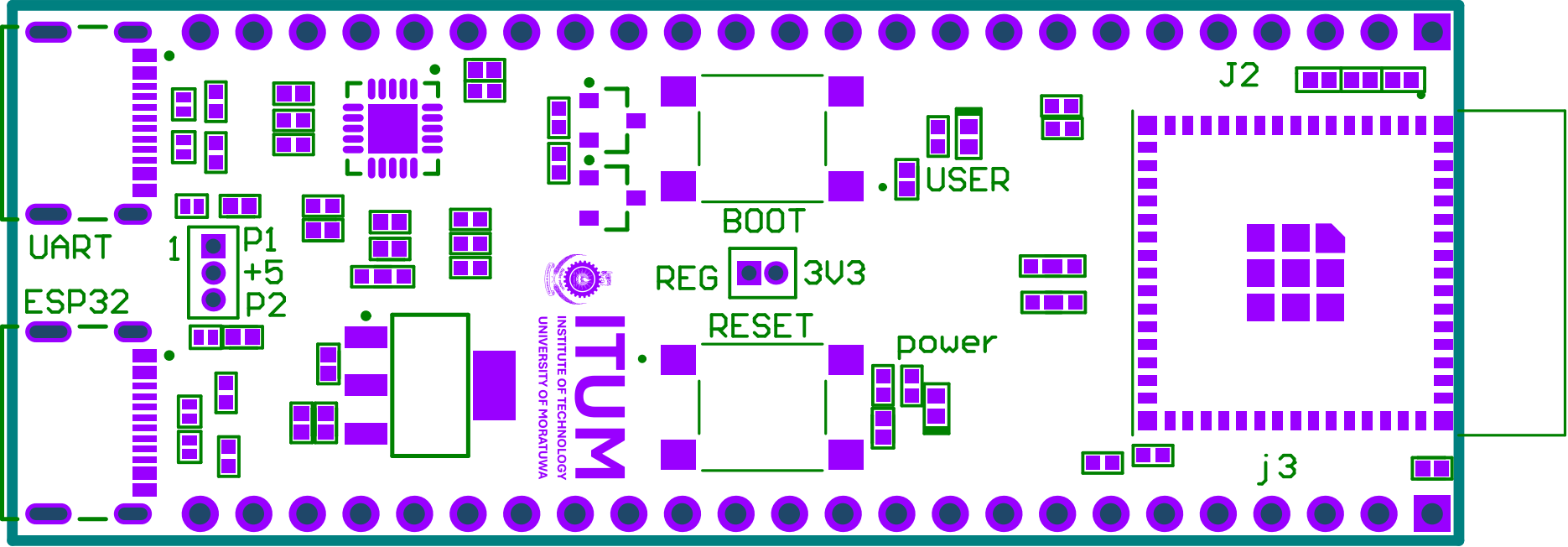
J2
USER
BOOT
UART
1
P1
+5
P2
REG
3V3
ESP32
RESET
power
j3
INSTITUTE OF TECHNOLOGY
UNIVERSITY OF MORATUWA
ITUM

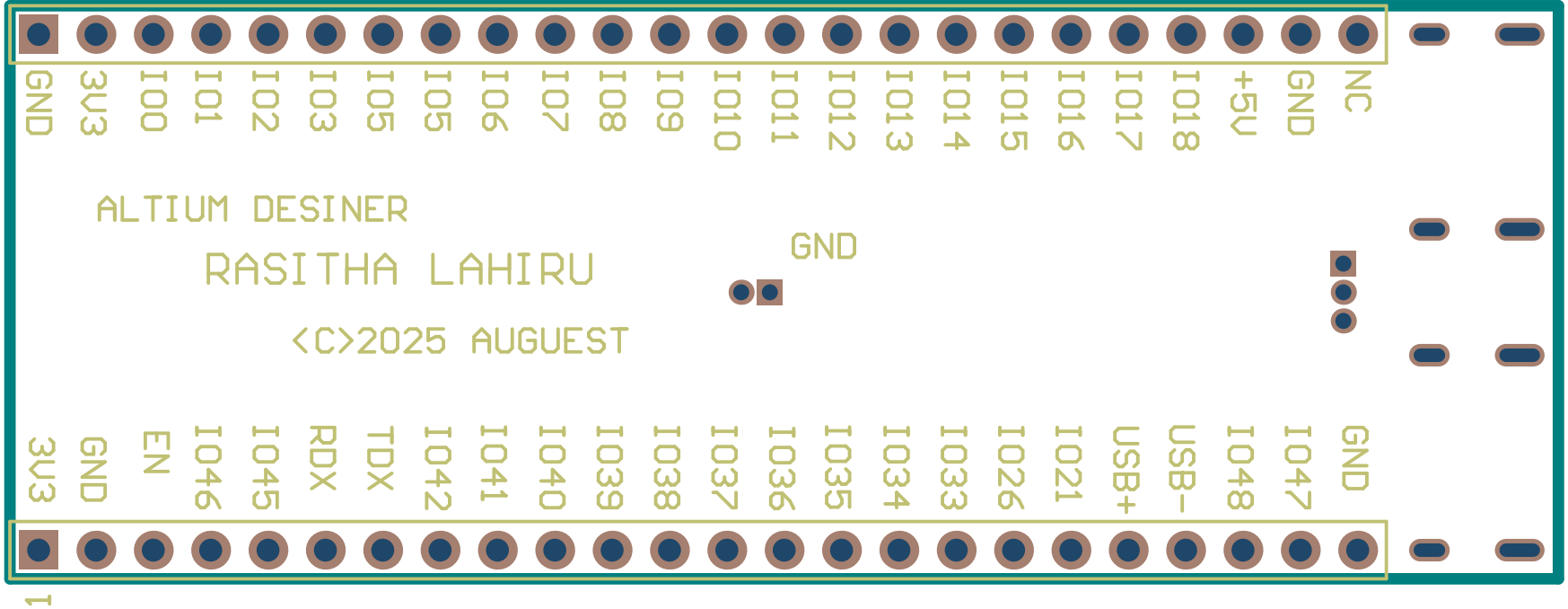
GND
3V3
IO0
IO1
IO2
IO3
IO5
IO5
IO6
IO7
IO8
IO9
IO10
IO11
IO12
IO13
IO14
IO15
IO16
IO17
IO18
+5V
GND
NC
ALTIUM DESINER
RASITHA LAHIRU
<C>2025 AUGUEST
GND
3V3
GND
EN
IO46
IO45
RDX
TDX
IO42
IO41
IO40
IO39
IO38
IO37
IO36
IO35
IO34
IO33
IO26
IO21
USB+
USB-
IO48
IO47
GND

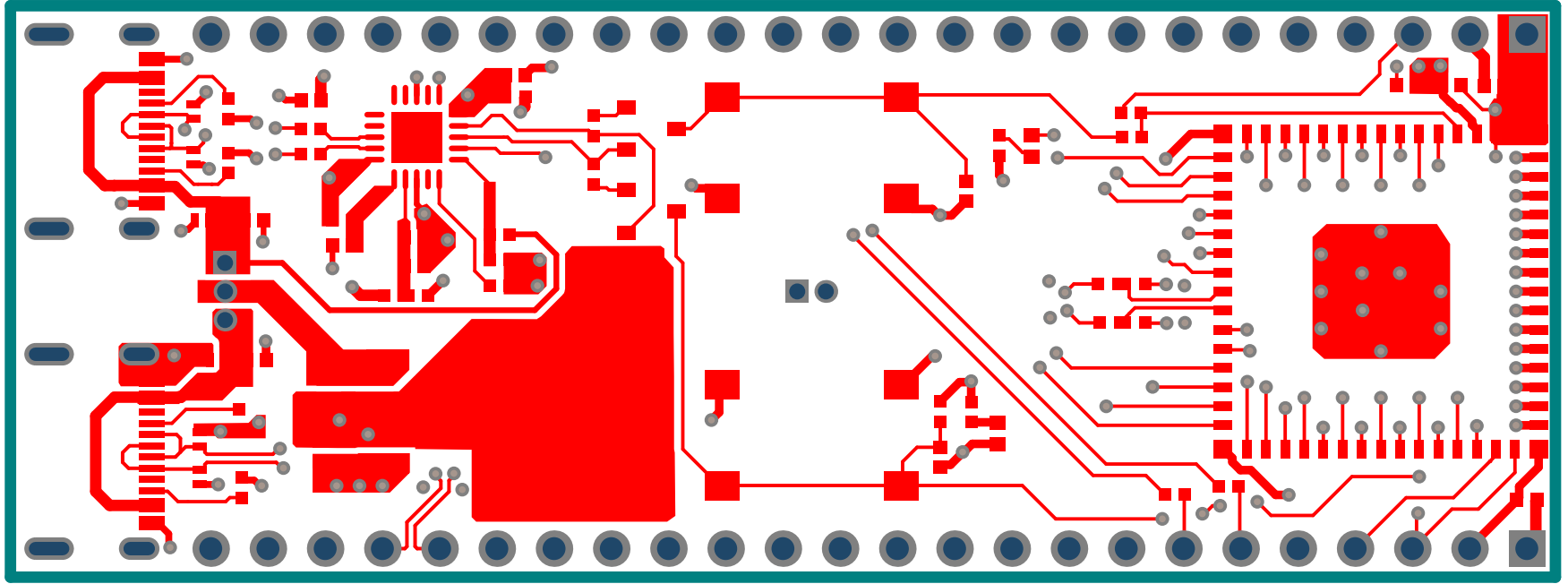

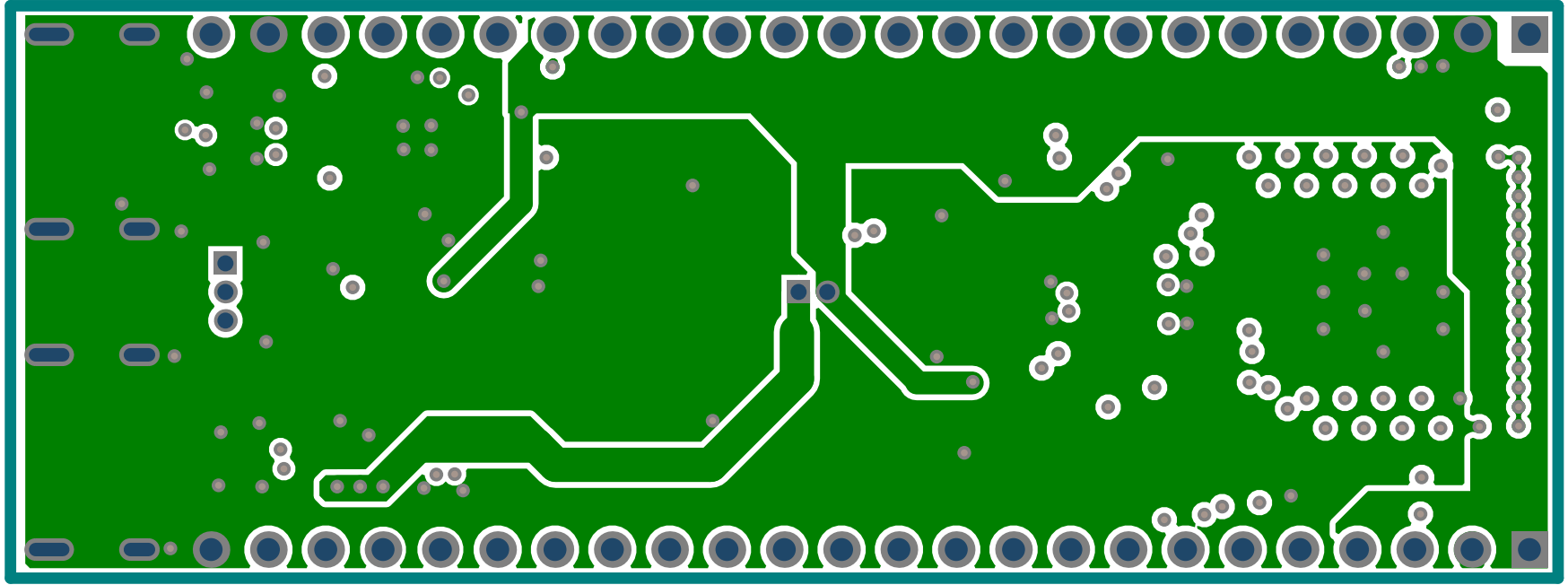

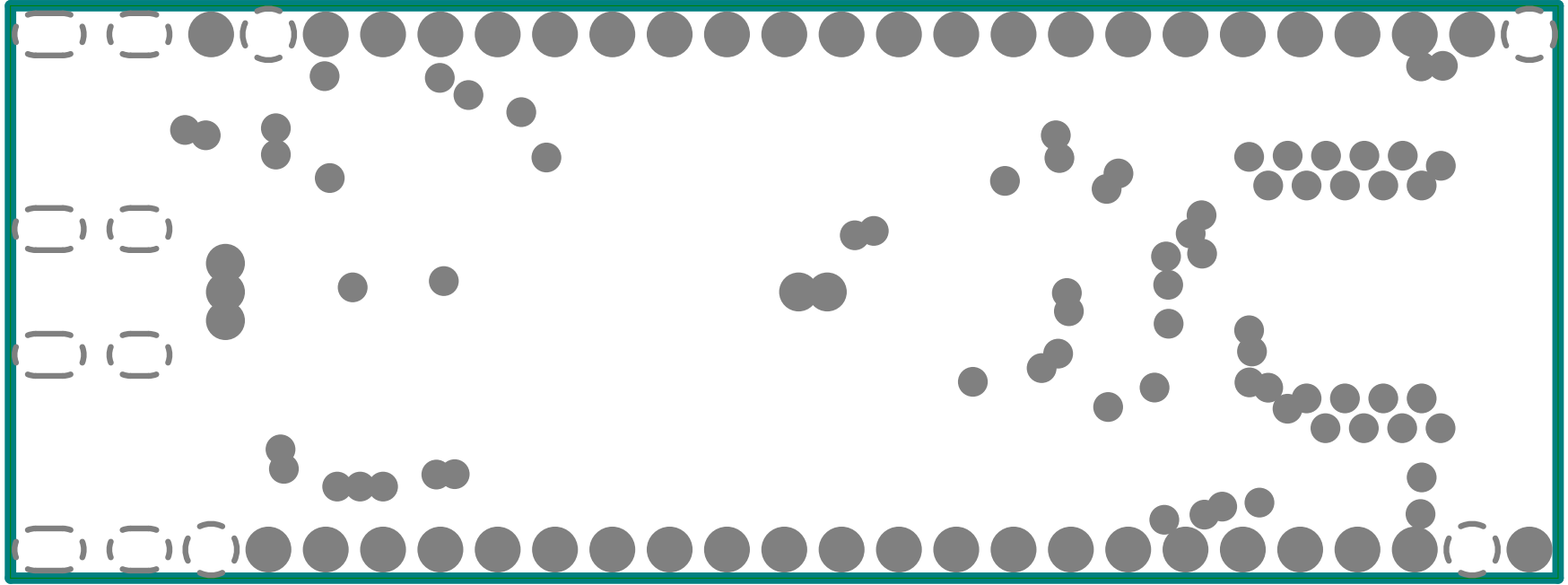

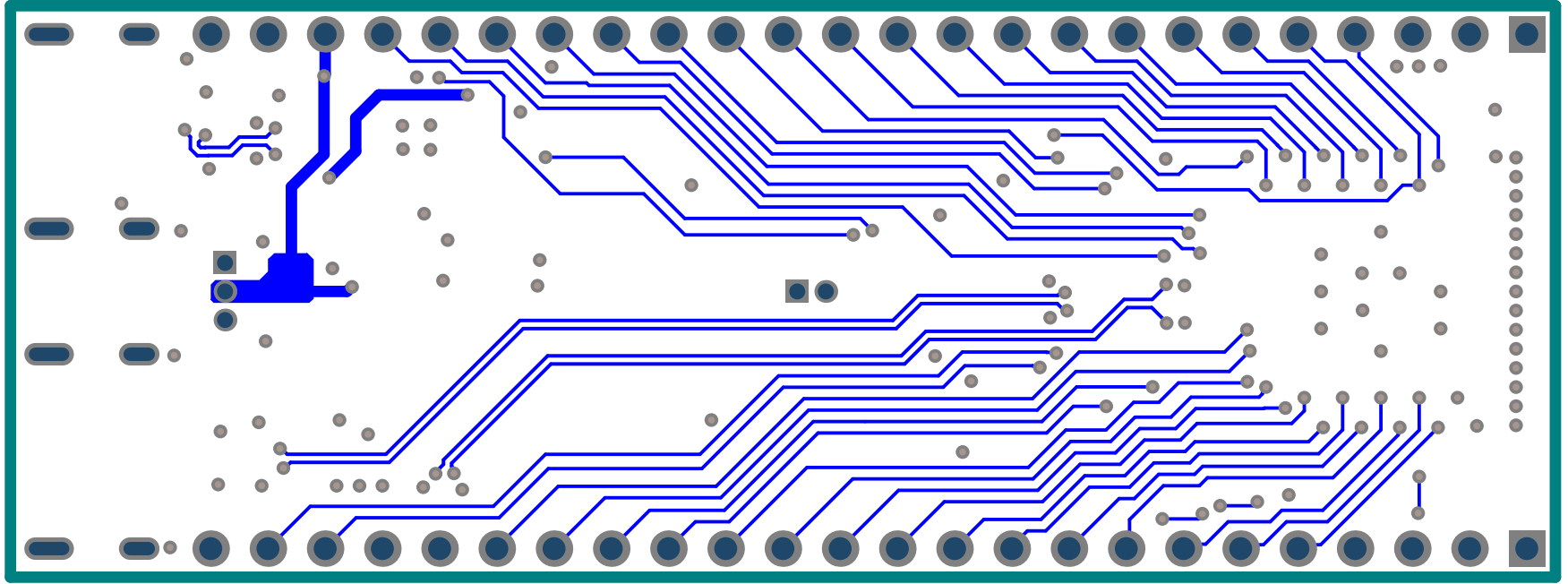

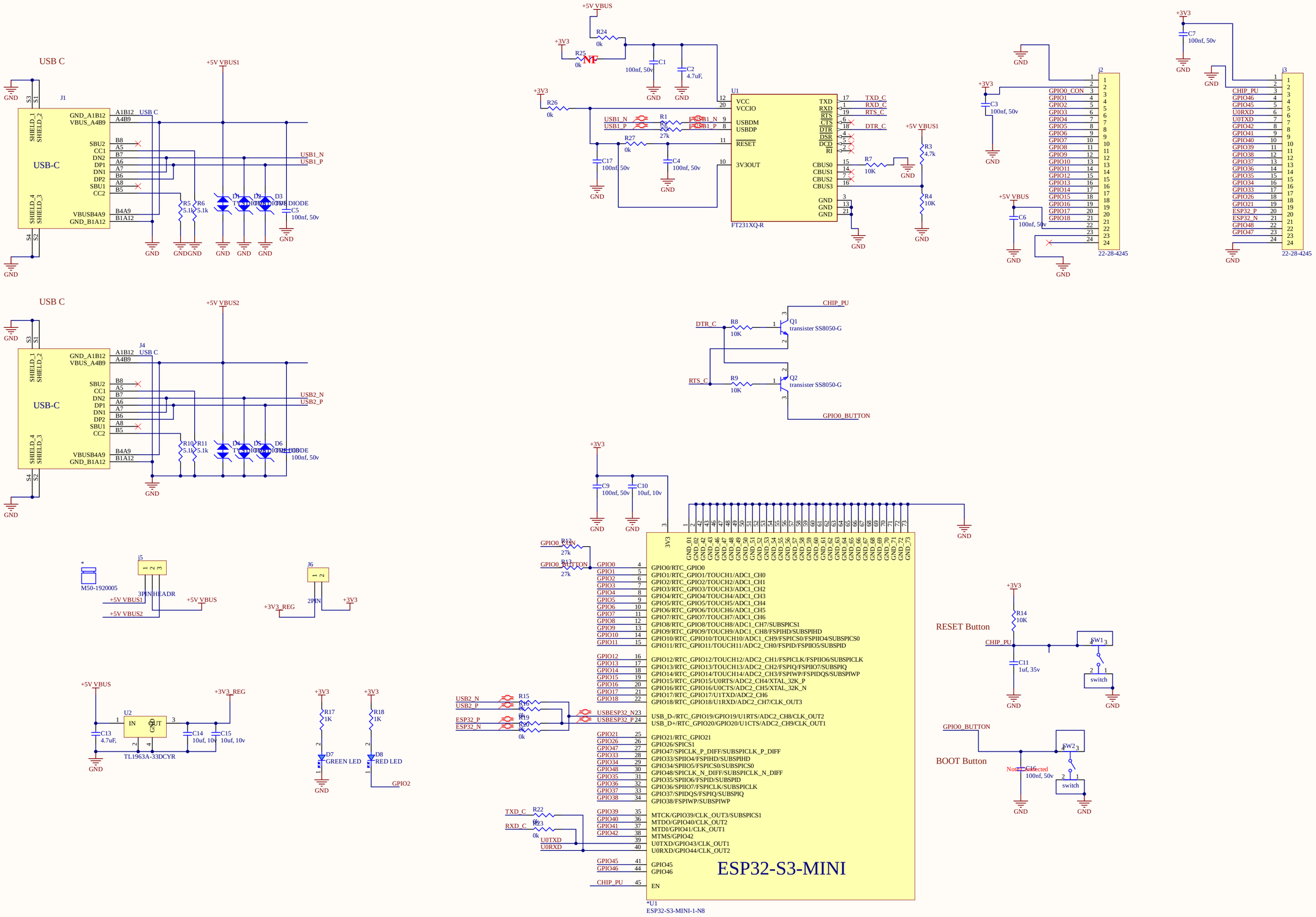

Title			
Size A2	Number		Revision
Date: 8/22/2025		Sheet of	
File: D:\New folder (2)\esp32.SchDoc		Drawn By:	