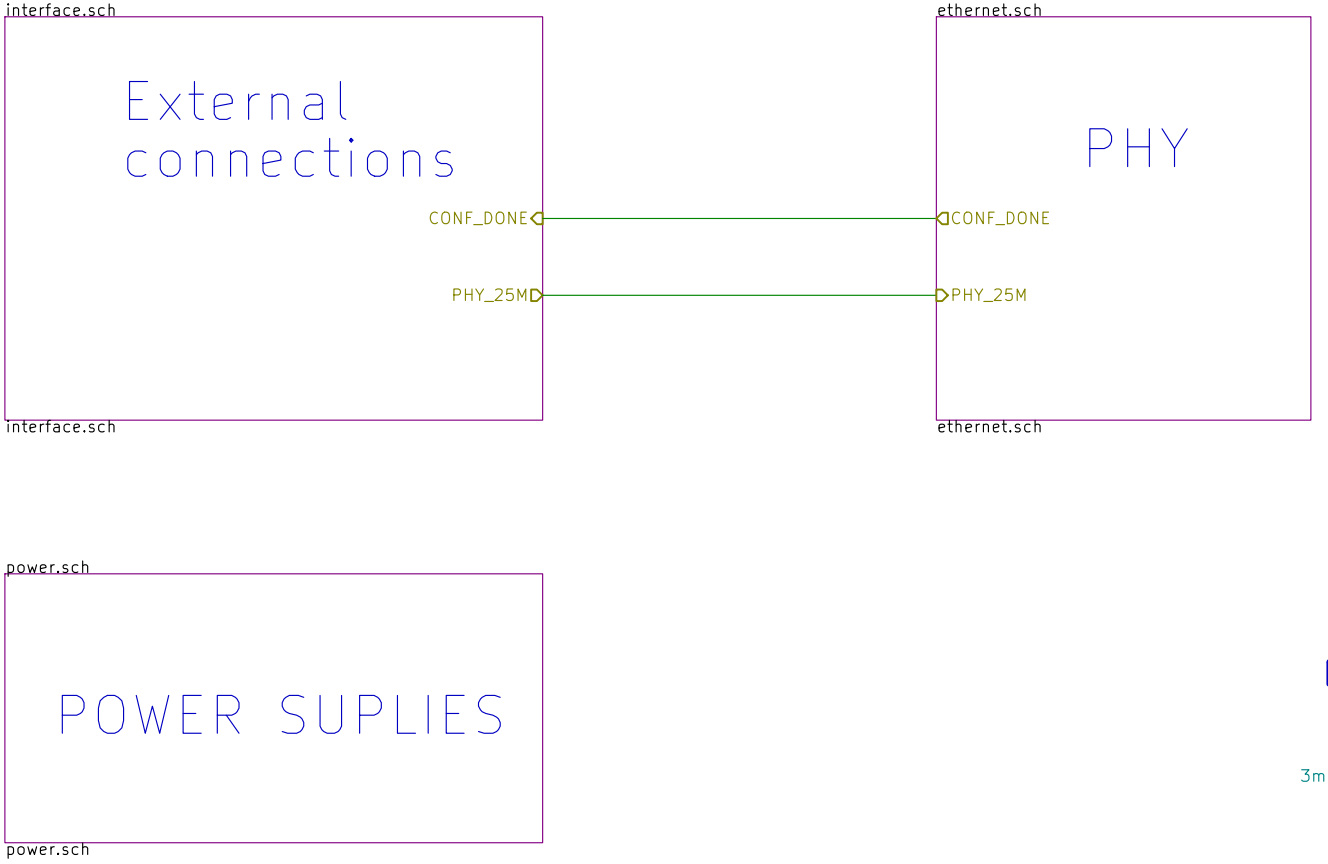

Mounting Holes

H1 3mm_Mounting_Hole

H3 3mm_Mounting_Hole

H2 3mm_Mounting_Hole

H4 3mm_Mounting_Hole

I. Pototskiy
07e20003-02
GENERAL RnD

Sheet: /
File: figa-pi.sch

Title: Figa-Pi

Size: A4	Date:	**Rev: 2.0**
KiCad E.D.A. eeschema (6.0.0-rc1-dev-237-g0531511)		Id: 1/4

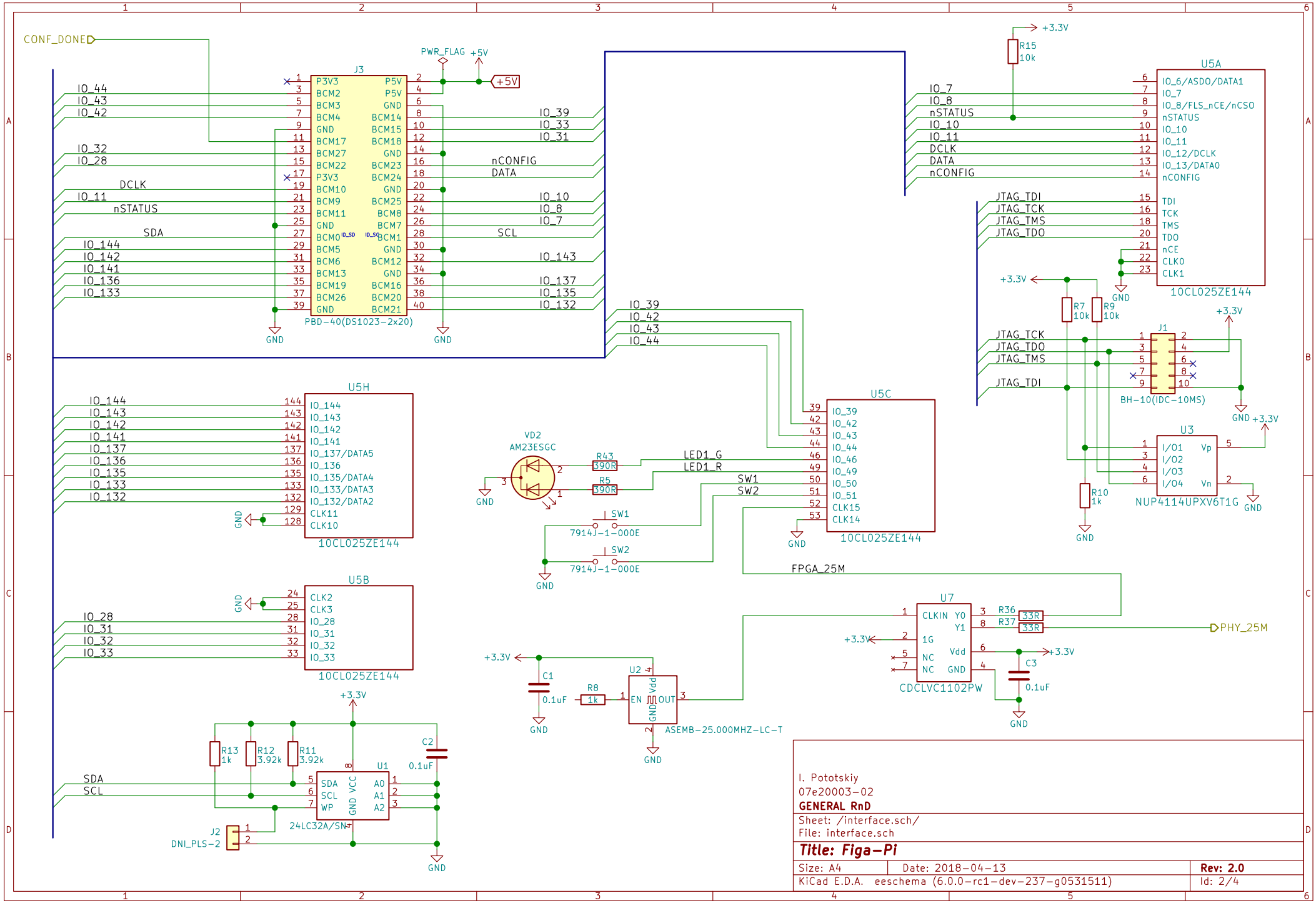

I. Pototskiy
07e20003-02
GENERAL RnD

Sheet: /interface.sch/
File: interface.sch

Title: Figa-Pi

Size: A4	Date: 2018-04-13	**Rev: 2.0**
KiCad E.D.A. eeschema (6.0.0-rc1-dev-237-g0531511)		Id: 2/4

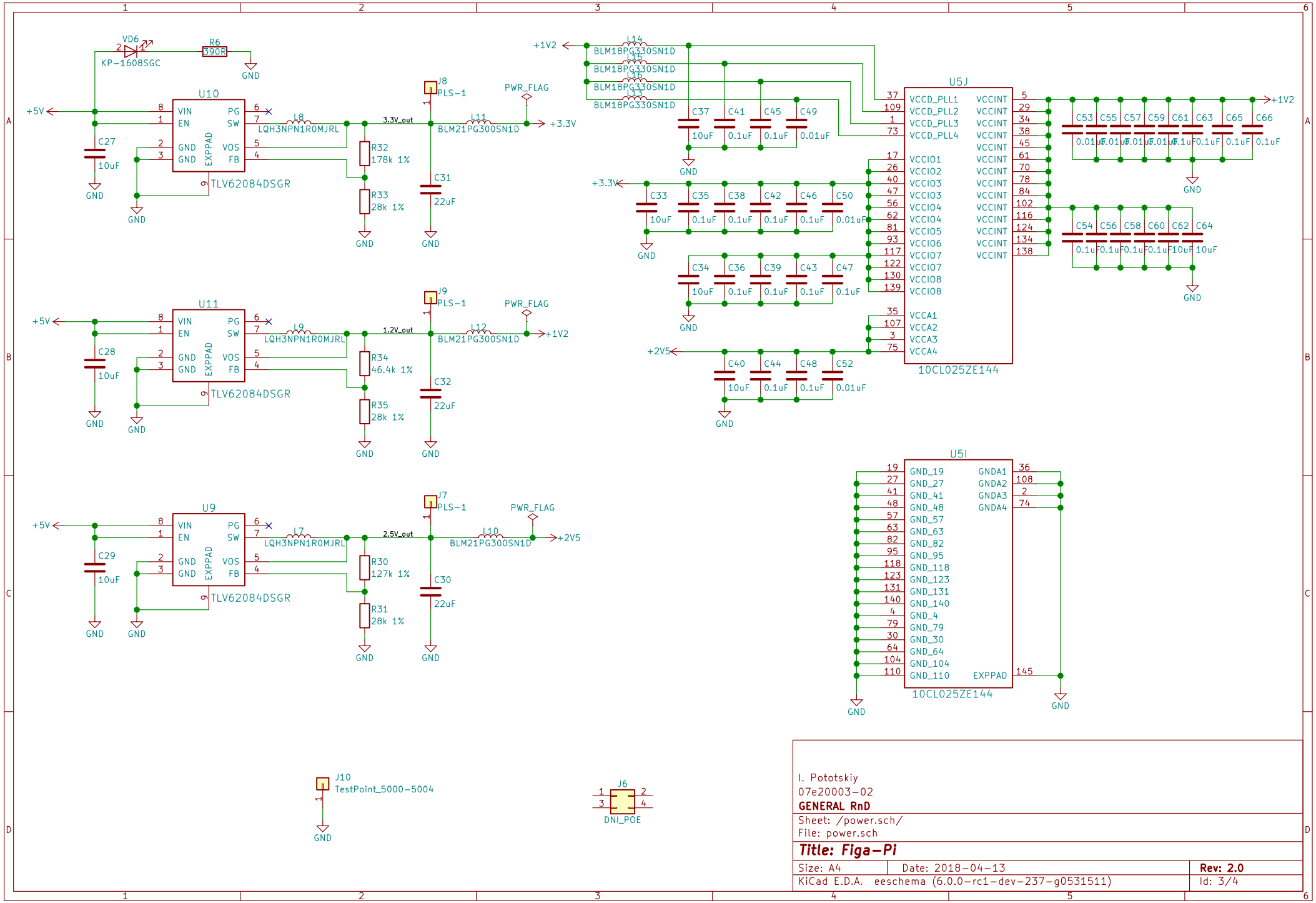

I. Pototskiy
07e20003-02
GENERAL RnD

Sheet: /power.sch/
File: power.sch

Title: Figa-Pi

Size: A4	Date: 2018-04-13	**Rev: 2.0**
KiCad E.D.A. eeschema (6.0.0-rc1-dev-237-g0531511)		Id: 3/4

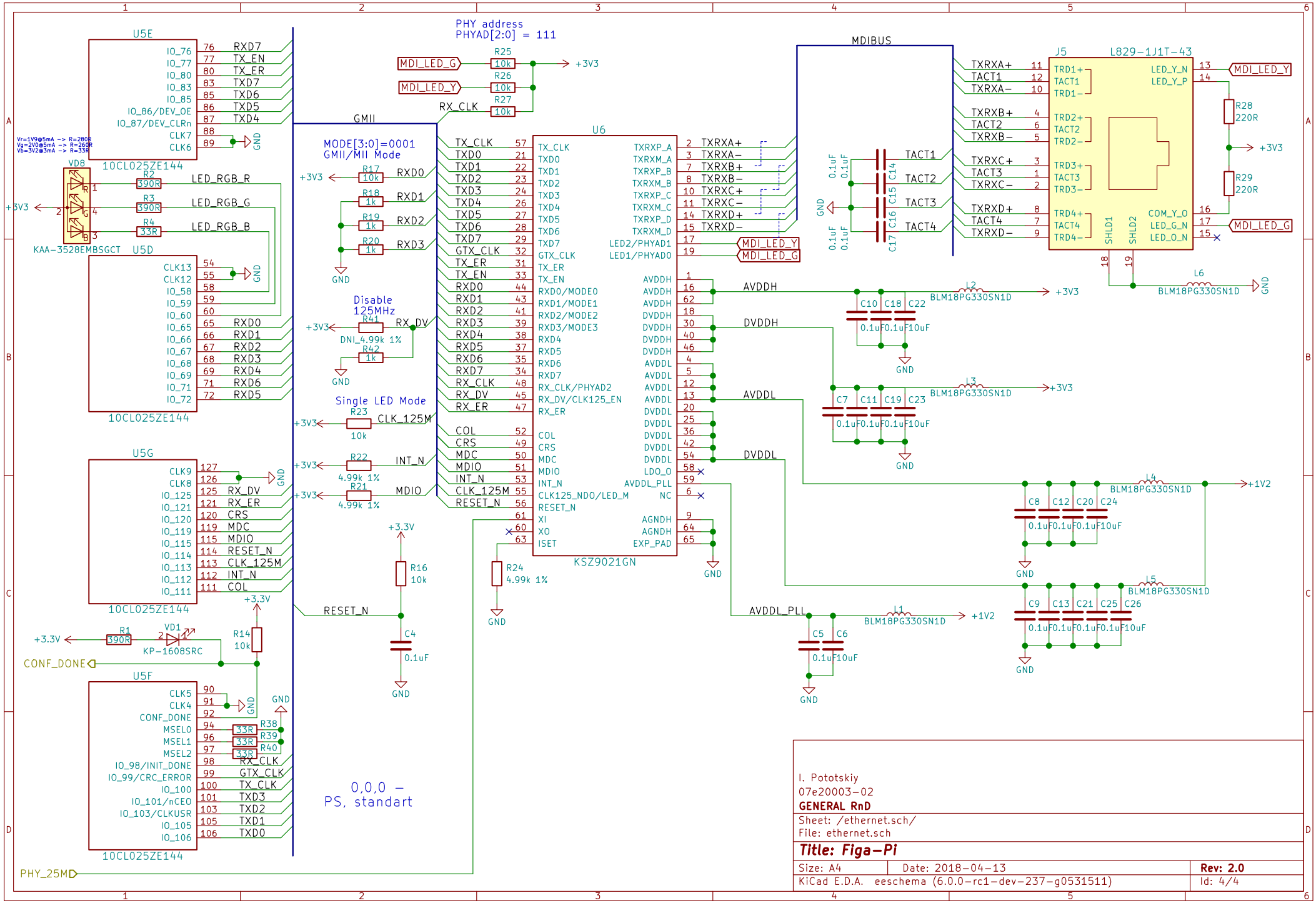

I. Pototskiy
07e20003-02
GENERAL RnD

Sheet: /ethernet.sch/
File: ethernet.sch

Title: Figa-Pi

Size: A4	Date: 2018-04-13	**Rev: 2.0**
KiCad E.D.A. eeschema (6.0.0-rc1-dev-237-g0531511)		Id: 4/4