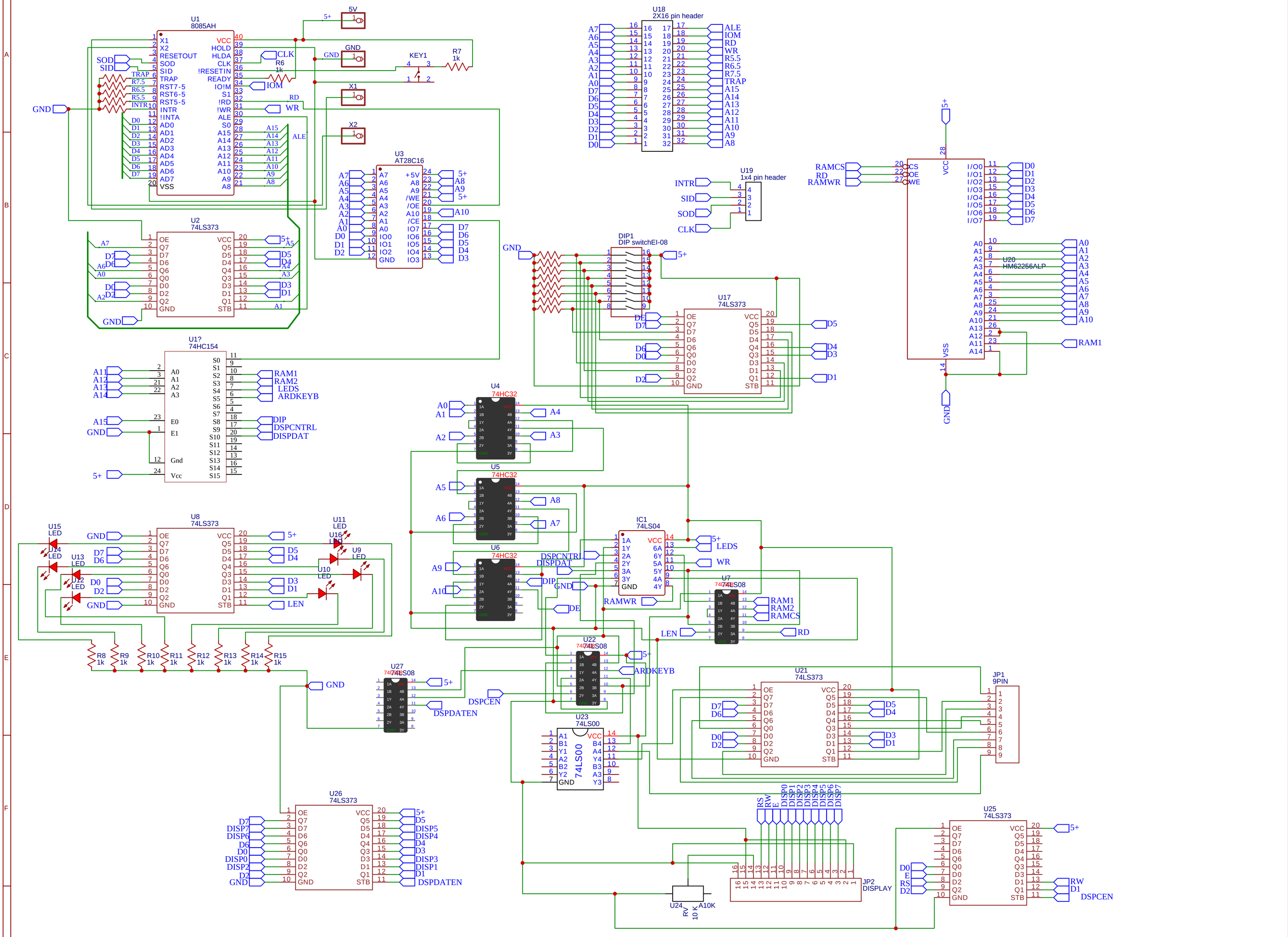

TITLE: 8085 System	REV: 1.1
Company:	Sheet: 1/1
Date: 2021-08-02 Drawn By: Geoalx	