THIS DOCUMENT AND THE DATA DISCLOSED HEREIN OR HEREWITH IS THE PROPERTY OF ALTIUM LIMITED AND MAY BE FREELY DISTRIBUTED IN WHOLE. NO RIGHTS ARE RESERVED OR EXPRESS OR IMPLIED WARANTEE GIVEN.

REVISION	DESCRIPTION	DATE	APPROVED

JST CONNECTOR

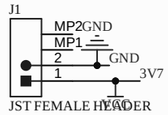

VOLTAGE REGULATOR CIRCUIT

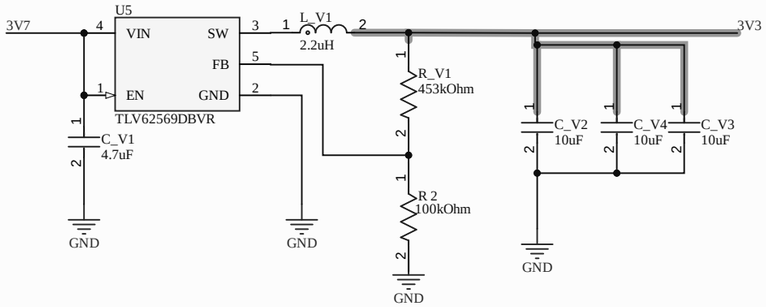

MICRO USB 5V & UART CIRCUIT

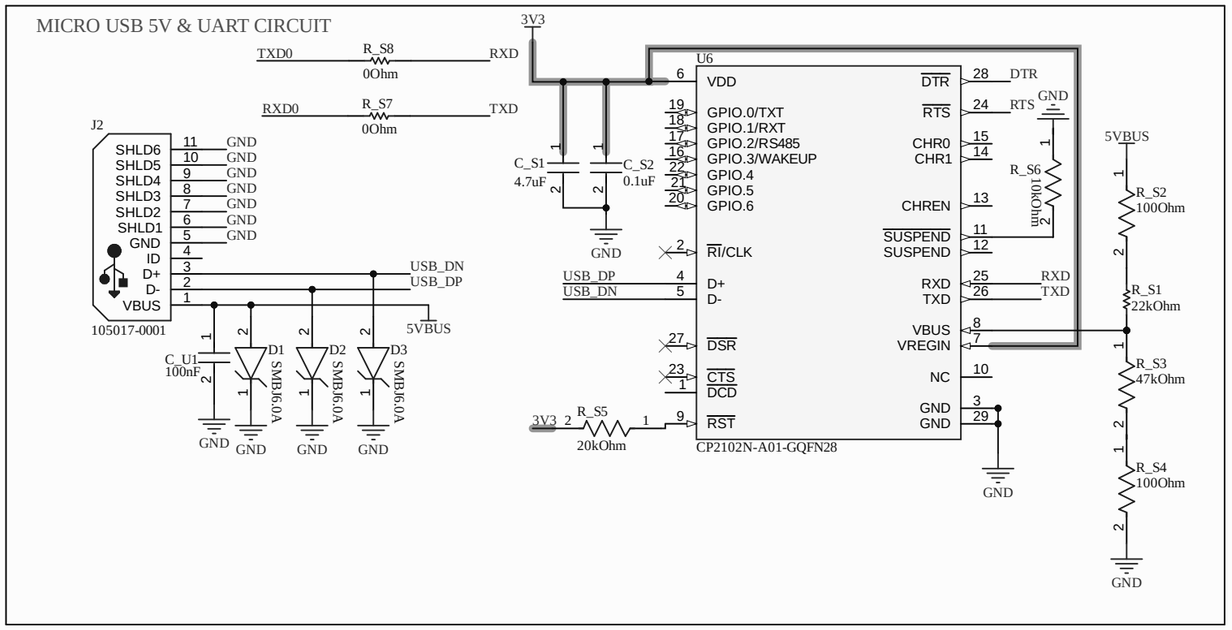

SENSOR DATA TO DB9

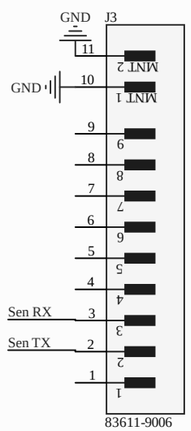

ESP 32 SOC

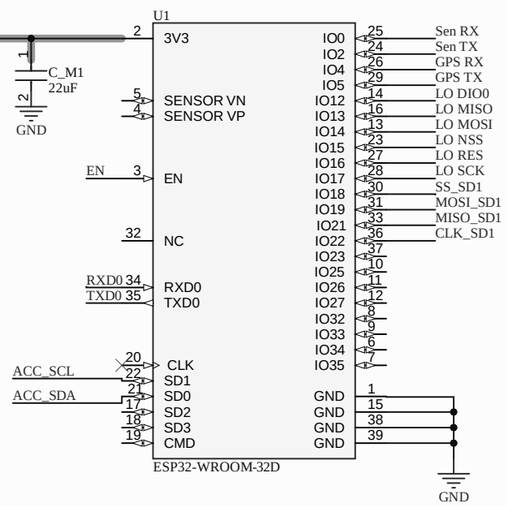

MICRO SD CARD

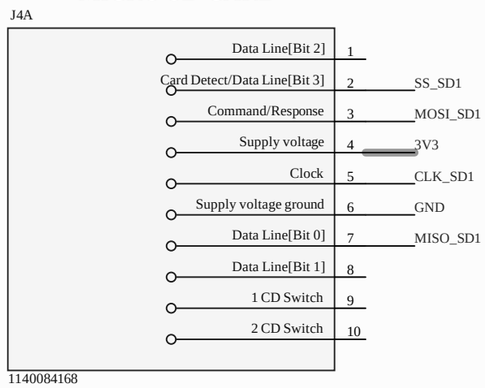

SERIAL SIGNALS HANDLING

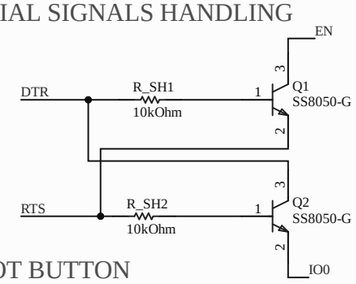

BOOT BUTTON

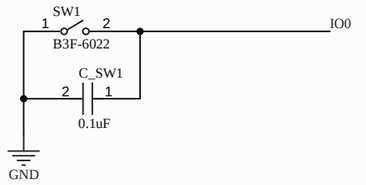

RESET BUTTON

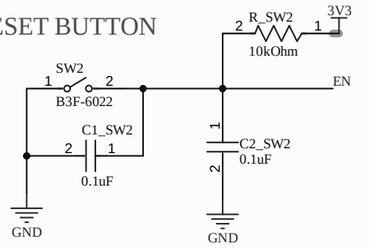

GPS AND LORA SOC

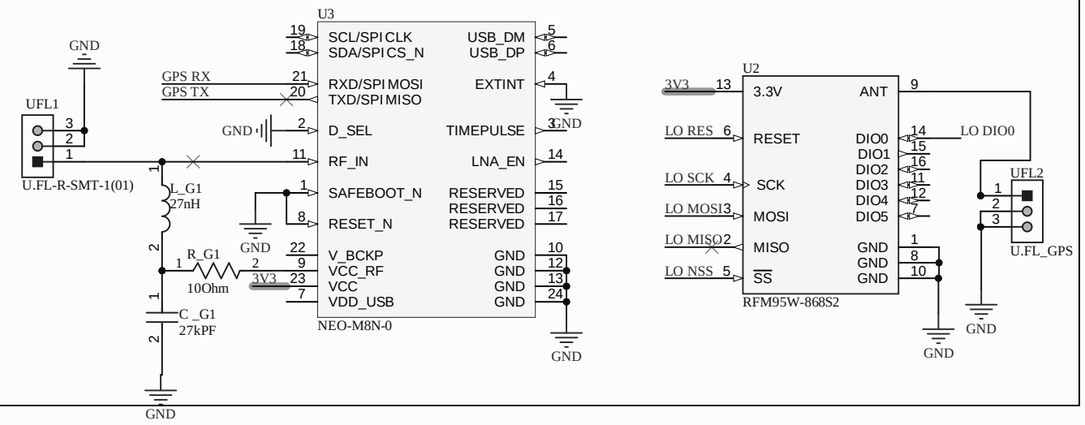

ACCELEROMETER AND GYROSCOPE SENSOR

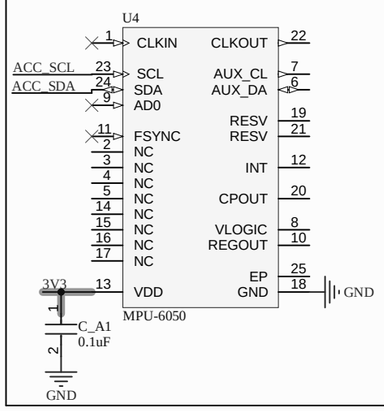

APPROVALS	DATE
ENG: --	
DSN: FRANIYO	
CHK: --	
REFERENCE DOCUMENTS	
BOM:	
ASSY DWG:	
FAB DWG:	
PCB DWG:	

PROJECT: Altium

PROJECT REVISION: 2750bf6c03f3b4c6e49502750b4ef13ad6b2e9801160946e11ae

DOCUMENT REVISION: 2750bf6c03f3b4c6e49502750b4ef13ad6b2e9801160946e11ae

DESIGN ITEM: --

TITLE: TELEMETRY SYSTEM - PAYLOAD

SIZE: A3 | CAGE CODE | DWG NO. | REV

SCALE: | FILE NAME: Sheet1.SchDoc | SHEET 1 OF 1