SINGAPORE UNIVERSITY OF SOCIAL SCIENCES

ENG201

Examination - January Semester 2024

Linear Systems Analysis and Design

Tuesday, 23 April 2024 **04:00 pm - 06:00 pm**

Time allowed: 2 hours

INSTRUCTIONS TO STUDENTS:

1. This examination contains **FOUR (04)** questions and comprises **FOUR (04)** printed pages (including cover page).
2. You must answer **ALL** questions.
3. All answers must be written in the answer book.
4. This is **Open-book** examination.

At the end of the examination.
Please ensure that you have written your examination number on each answer book used.

Failure to do so will mean that your work cannot be identified.
If you have used more than one answer book, please tie them together with the string provided.

THE UNIVERSITY RESERVES THE RIGHT NOT TO MARK YOUR SCRIPT IF YOU FAIL TO FOLLOW THESE INSTRUCTIONS.

ENG201 Copyright © 2024 Singapore University of Social Sciences (SUSS)

Answer all questions. (100 marks)

Question 1

(a) Describe the even and odd components of a discrete-time signal $x[n] = n^2 + n + 1$, denoted as $x_e[n]$ and $x_o[n]$ respectively. Sketch the waveforms of $x_e[n], x_o[n]$ and $x[n]$.

(13 marks)

(b) A sinusoidal signal $x(t) = 2\sin(20\pi t)$ is passed through a circuit to produce $y(t)$ which is given below.

$$y(t) = \begin{cases} x(t), & \text{if } x(t) > 0 \\ 0, & \text{otherwise.} \end{cases}$$

Determine the energy and power levels of $x(t)$ and $y(t)$, respectively.

(12 marks)

Question 2

(a) Consider the impulse response of a system given by

$$h(t) = \sum_{k=-1}^{1} (\frac{1}{2})^k \delta(t - 3k).$$

Assume the input signal is $x(t) = 2\ \mathrm{rect}\left(\frac{t-1.5}{3}\right)$.

(i) Analyze whether the system is memoryless, causal and stable.

(7 marks)

(ii) Sketch the waveforms of the input and output signals.

(10 marks)

(b) Calculate the fundamental period for the following signals.

(i) $x(t) = \cos(t + \frac{\pi}{4})$

(2 marks)

(ii) $x(t) = \pi \sin(\frac{2\pi t}{3})$

(2 marks)

(iii) $x(t) = 2\sin^2(t)$

(2 marks)

(iv) $x(t) = 5\exp(j(\frac{\pi}{2})t)$

(2 marks)

Question 3

A LTI system is described by the following differential equation. Assume the initial conditions for $y(t)$ and $dy(t)/dt$ to be zero.

$$\frac{d^2y(t)}{dt^2} - 9y(t) = \frac{d^2x(t)}{dt^2} - 21x(t).$$

(a) Solve for the impulse response of the above LTI system.

(10 marks)

(b) Sketch the time domain impulse response obtained in Question 3(a).

(5 marks)

(c) Find the step response for the above given system.

(10 marks)

Question 4

(a) Discuss how feedback loops affect linear systems and models.

(4 marks)

(b) Find the frequency response of the system shown in Figure Q4(b) in terms of $H_1(\omega)$, $H_2(\omega)$ and $H_3(\omega)$.

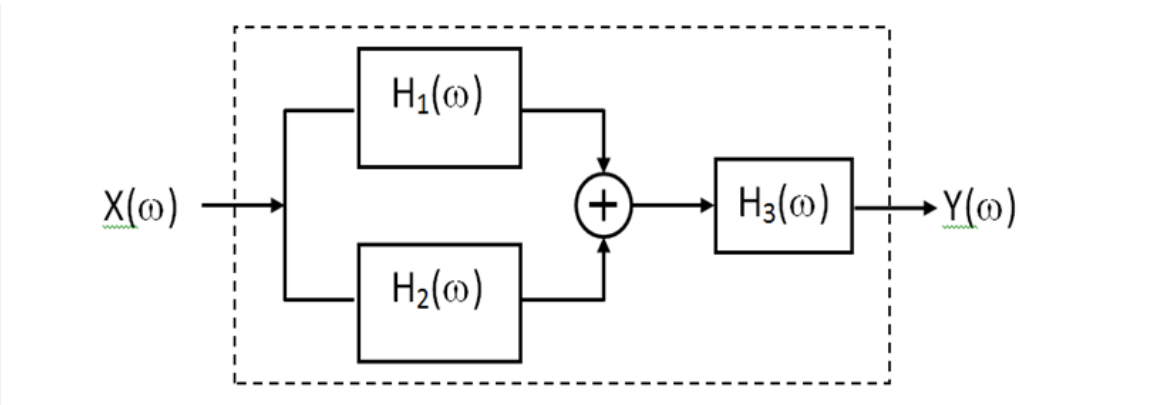

Figure Q4(b)

(10 marks)

(c) A second order feedback control system with unity feedback is shown in Figure Q4(c). Determine $E(s)$ for a unit step input function.

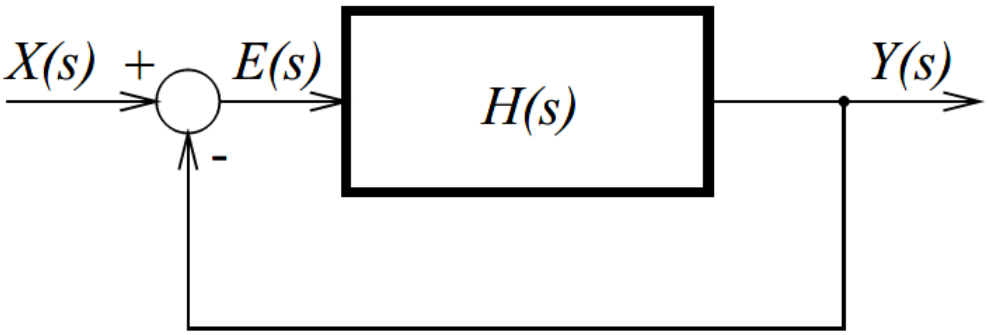

Figure Q4 (c)

(11 marks)

----- END OF PAPER -----