1W Blue SMD 3535 LED

Part Number: SL-3535B450-1CC0-S1C8M

Package	Wavelength	Luminous Flux	Test Current
SMD 3535	450–460 nm	15–30 lm	350 mA

Features

- Small package with high luminous efficiency
- Low voltage operation, instant-on
- Long operating life
- RoHS compliant | ISO 9001 certified
- Silicone lens encapsulation

Applications

- Portable & flash lighting (torches, bicycle lights)
- Landscape & architectural lighting
- General indoor lighting
- Industrial lighting
- Automotive lighting

Absolute Maximum Ratings (TA = 25 °C)

Parameter	Symbol	Rating	Units	Notes
DC Forward Current	IF	1000	mA	Continuous
Peak Pulse Current	IFP	1500	mA	1/10 duty, 0.1 ms
Power Dissipation	PD	3	W	
Reverse Voltage	VR	5	V	
Reverse Current	IR	10	µA	VR = 5 V
Operating Temperature Range	TOPR	−40 to +85	°C	
Storage Temperature Range	TSTG	−40 to +100	°C	
LED Junction Temperature	TJ	150	°C	Maximum

1. *Peak pulse: 1/10 duty cycle, 0.1 ms pulse width.*
2. *Power dissipation must not exceed the absolute maximum rating.*
3. *Maximum operating current must be determined after measuring package temperature; junction temperature must not exceed the rated maximum.*

Electrical / Optical Characteristics (TA = 25 °C)

Parameter	Symbol	Conditions	Min	Typ	Max	Units
Forward Voltage	VF	IF = 350 mA	2.70	—	3.10	V
Thermal Resistance (Junc.–Board)	RθJ-B	IF = 350 mA	—	6.5	—	°C/W
Luminous Flux	ΦV	IF = 350 mA	15	—	30	lm
Dominant Wavelength	λd	IF = 350 mA	450	—	460	nm
Reverse Current	IR	VR = 5 V	—	—	10	µA
Viewing Angle (2θ½)	2θ½	IF = 350 mA	—	120	—	degrees

1. *Forward voltage tolerance ±0.1 V.* 2. *Luminous flux tolerance ±5%.* 3. *Wavelength tolerance ±1 nm.*
4. *2θ½ = half-intensity angle — the angle from optical centreline where luminous intensity equals 50% of peak value.*

Package Dimensions

All dimensions in millimetres. Tolerance ±0.1 mm unless otherwise stated.

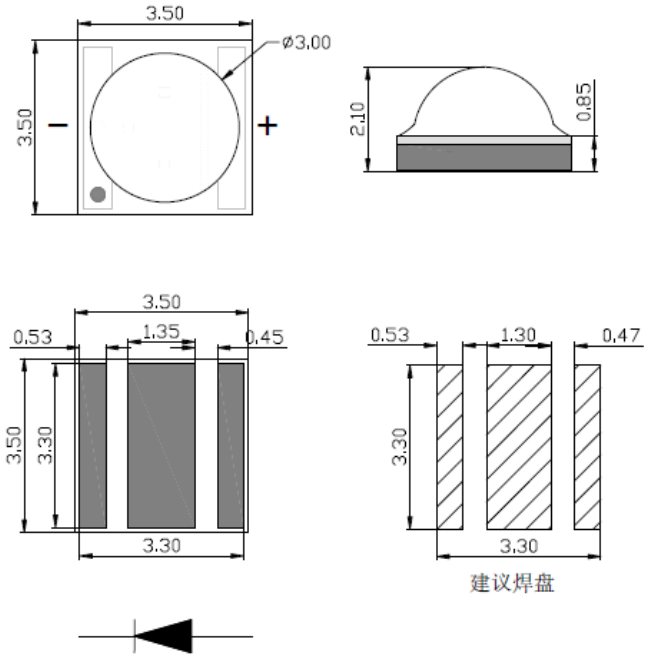

Reliability Test Standards

Test	Standard	Conditions	Duration	Pass / n
Temperature Cycle	JESD22-A104-A	100 °C ±5 / 30 min ↔ 25 °C / 30 min	100 cycles	22/22
Thermal Shock	JESD22-A106	−40 °C ↔ +100 °C — 30 min each	100 cycles	22/22
High Temp. Storage	JEITA ED-4701	TA = 100 °C ±5 °C	1000 hrs	22/22
Low Temp. Storage	JEITA ED-4701	TA = −40 °C ±5 °C	1000 hrs	22/22
Humidity & Heat Storage	JIS C 7021	TA = 60 °C, RH = 85%	1000 hrs	22/22
Life Test	JESD22-A108-A	TA = 25 °C, IF = 350 mA	1000 hrs	22/22
High Humidity Life	JESD22-A101	TA = 60 °C, RH = 85%, IF = 350 mA	1000 hrs	22/22

Failure Criteria

Parameter	Symbol	Conditions	Min	Max
Forward Voltage	VF	IF = 350 mA	—	USL × 1.1
Reverse Current	IR	VR = 5 V	—	10 µA
Luminous Flux	Φ	IF = 350 mA	LSL × 0.7	—
Lamp Lighting Test	—	IF = 350 mA	No open/short circuit or flicker	

USL = Upper Specification Limit. LSL = Lower Specification Limit.

SMT Reflow Soldering

Parameter	Value
Average ramp-up rate (Tsmax to Tp)	≤ 3 °C/s
Preheat minimum temperature (Tsmin)	130 °C
Preheat maximum temperature (Tsmax)	180 °C
Preheat time (Tsmin to Tsmax)	60 – 120 s
Time-limited high temp. level (TL)	200 °C
Time above TL (tL)	≤ 60 s
Peak / classification temp. (Tp)	240 °C
Time within 5 °C of Tp (tp)	≤ 10 s
Time held within 5 °C below Tp	≤ 30 s
Cool-down rate	≤ 6 °C/s
Total time 25 °C to peak	≤ 8 min

Reflow Notes

- Reflow soldering must not be performed more than twice. If more than 24 hours elapse between first and second reflow, the LEDs may be damaged by moisture absorption.
- Do not press on the silicone surface while the material is heated.
- Apply thermal paste evenly to the aluminium substrate; stir paste clockwise for 10–15 minutes before use.
- Cut the solder paste stencil in a cross pattern to allow air circulation and prevent paste lifting.
- Ensure both LED pins are correctly seated on the substrate pads; inspect at 45° after placement.
- After reflow, check all devices for correct centring on pads — off-centre devices may cause open circuits when secondary lenses are fitted.
- Do not allow rapid cooling after reflow. Do not apply mechanical force or vibration during cooling.
- Do not solder to a warped or deformed PCB.

Hand Soldering

- Soldering iron temperature: below 300 °C, contact time not to exceed 3 seconds.
- Hand soldering may only be performed once per joint.

Rework

- Rework should not be performed after reflow. When unavoidable, use a double-head soldering iron and confirm in advance that LED characteristics will not be damaged.

Handling & Storage Guidelines

Storage

- Store in a dry cabinet with desiccant: 5 °C – 30 °C, humidity ≤ 60% RH.
- After 6 months storage, re-sort by flux and colour before use to verify parameters.
- Products sealed for ≥ 6 months: dry at 65 °C ±5 °C for 10 hours before use.
- Once moisture-barrier bag is opened, use within 24 hours — otherwise bake at 65 °C for 4–6 hours before reflow.

Mechanical Handling

- LED encapsulation is silicone — the surface is soft. Avoid strong pressure on the package.
- Normal-axis (top-surface) force: < 2 N, maximum 3 times. Side force: < 1.5 N, maximum 3 times.
- Do not press the silicone with tweezers or other sharp objects. Do not leave fingerprints on the lens surface.
- Do not mount on warped (non-coplanar) PCB areas. Do not flex the circuit board after soldering.
- Keep PCB temperature below 60 °C during LED operation.

General

- Do not expose to water, oil, or organic solvents.
- Operating current must account for LED junction temperature — derate accordingly.
- Repackage unused devices in moisture-proof bags sealed with desiccant and store in a dry location.
- Dimensions are subject to change without prior notice.

ESD Precautions

- This is an electrostatic-sensitive device. Operators must wear an ESD wrist strap or ESD gloves at all times.
- All equipment, tools, and workbenches must be effectively earthed.

Sulphurisation / Halogen Warning

- In enclosed, high-temperature luminaires, sulphur, chlorine, and bromine vapours can penetrate the silicone encapsulant and react with the silver-plated contacts, causing blackening, lumen depreciation, and colour-temperature shift leading to eventual failure.
- Perform a sulphur-exclusion test on the luminaire before deployment to ensure the LED operates in a sulphur/chlorine/bromine-free environment.

Packing Standard

- 1,000 pieces per reel, packed in aluminium moisture-proof bag with desiccant.
- Reel diameter: 178 mm. Tape width: 12 mm. Pocket pitch: 4 mm. Pocket depth: 3.84 mm.
- Label shows: IF (mA), VF (V), Φ (lm), λd (nm), quantity (PCS).

Plus Opto Limited
B13 Derwent Court, William Way
Moss Industrial Estate
Leigh, Lancashire WN7 3PT
United Kingdom
Tel: +44 (0)1942 671122
Email: sales@plusopto.co.uk
Web: www.plusopto.co.uk

Manufacturer

Seam Semiconductors

Disclaimer

Plus Opto Limited is the authorised UK distributor for this product. Specifications are subject to change without notice. This document is provided for reference only. Technical data represents typical values and does not constitute a guarantee for any specific application. Verify with Plus Opto for the latest revision.

Document reference: PO-DS-SL3535B450-1CC0-S1C8M-RevA | Issue date: March 2026 | *© 2026 Plus Opto Limited. All rights reserved.*