LF-GIF040HAxxxxH

GIF*HA SELV | Constant Current Compact - Non Dimmable

Product family features

— Low THD≤10%

— Rated input range: 220–240Vac

— Ta range: -20 - +45 °C

— Ripple current<3%

— 5 years guarantee

— Lifetime up to 100,000h

Product family benefits

— High efficiency

— Flicker free

— Long lifetime and high reliability

— SELV output

Typical applications

— For panel light

— For office, commercial, and decorative lighting

Product parameters

— Output current 750/800/850/900/950/1000/1050mA

— Output power 18.75-44.1W

— Input voltage 198–264Vac

— Output voltage 25-42Vdc

— Efficiency 93.5%

Electrical data

Input data

Nominal input voltage	220 ... 240V
Input voltage AC	198 ... 264V
Mains frequency	50/60Hz
Input voltage DC	/
Power factor	≥0.95
Efficiency	93%
THD	≤10%
Input current	0.28A Max
Inrush current	35A [1)]
Loading number on circuit breaker 10 A (B)	17
Loading number on circuit breaker 10 A (C)	27
Loading number on circuit breaker 16 A (B)	27
Loading number on circuit breaker 16 A (C)	43
Protective conductor current	≤0.7mA

Output data

Nominal output voltage	25...42V
Nominal output current	750/800/850/900/950/1000/1050mA[2)]
Maximum output power	44.1W
Nominal output power	18.75 ... 44.1W
Output ripple current (100 Hz)	<3%
Flicker	According to IEEE Std 1789-2015
CIE SVM	≤0.4
IEC-Pst	≤1
Current tolerance	±5%
Temperature tolerance	±10%
Start-up time	<0.5S

Safety

Withstanding voltage	I/P-O/P: 3.75kV&5mA&60S
Surge capability (L-N)	1kV
Surge capability (L/N-Ground)	-
Insulation Resistance	I/P-O/P: >100MΩ@500Vdc
Lifetime	Up to 100,000 hours[3)]
Guarantee	5 years [4)]

1) t =150μs
2) Please refer to the operating window about the relationship between output voltage and output current
3) For details, please refer to the service life table
4) 5 years@Tc≤70℃

Characteristic diagrams

Operating Window

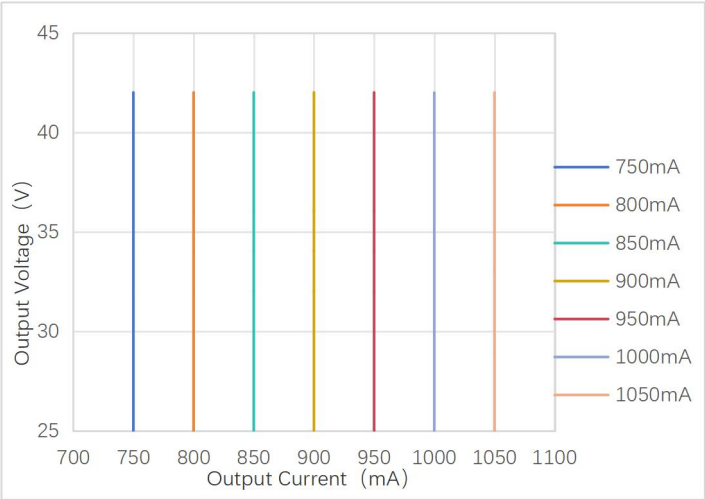

Typical Efficiency vs Load

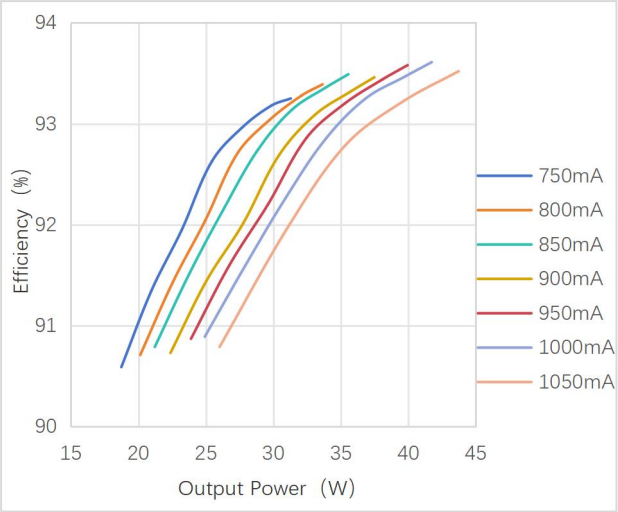

Typical Power Factor vs Load

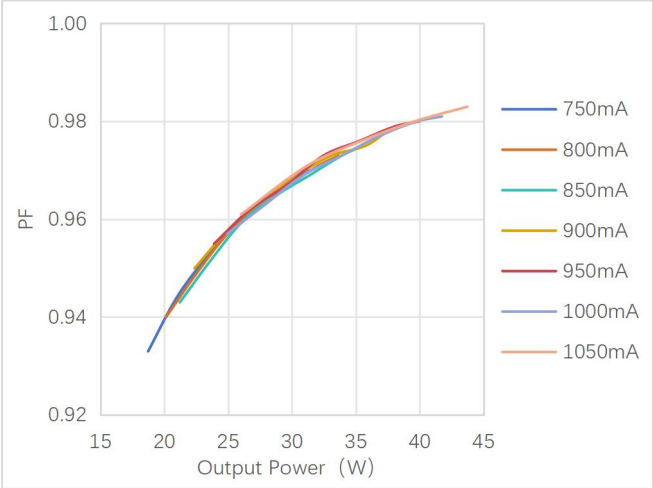

Typical THD vs Load

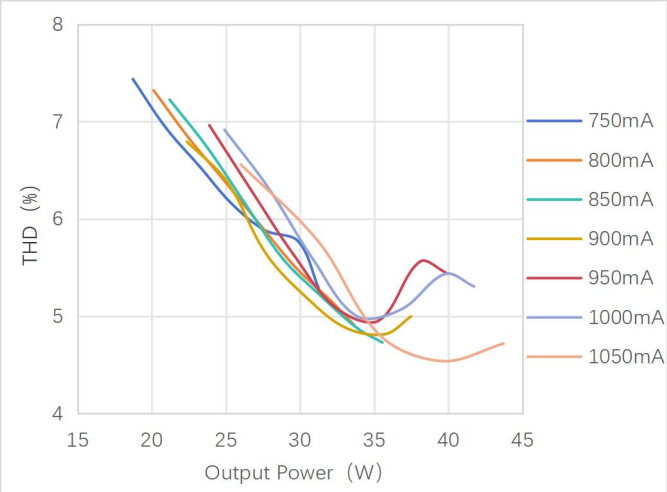

Lifespan

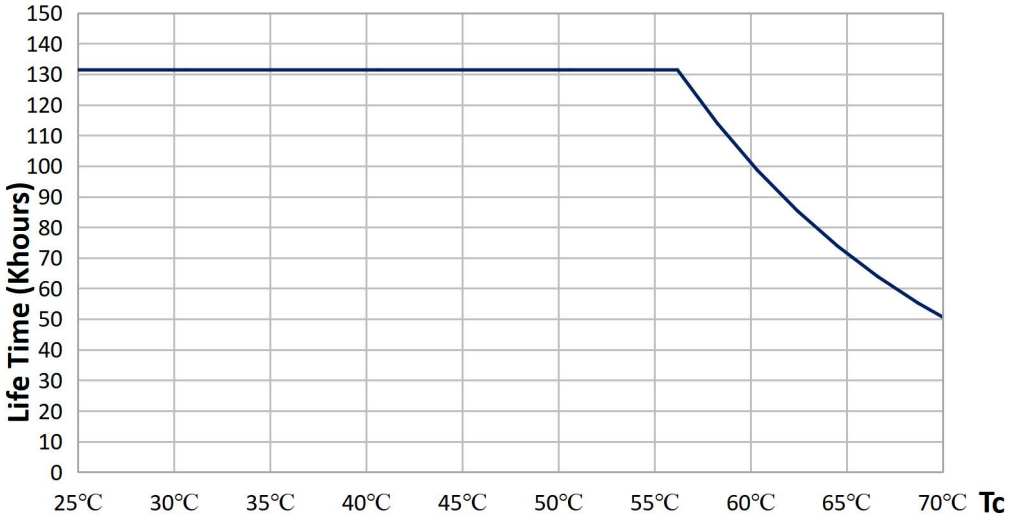

Service life

Model	Iout	Pout	Ta	35°C	45°C
LF-GIF040HAxxxxH	1050mA	40W	Tc	60°C	70°C
			Lifetime	>100,000h	>50,000h

Dimensions (Unit: mm)

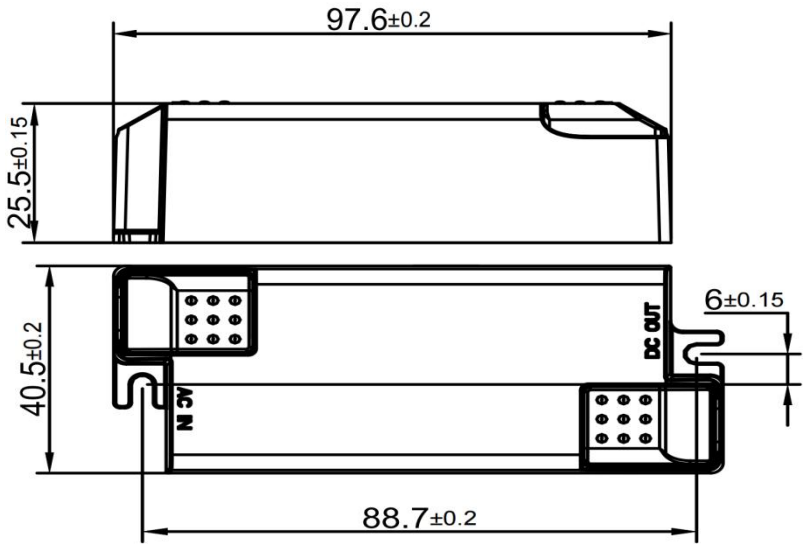

Mounting hole spacing, length	88.7±0.2mm
Product weight	75.00 g ±5%
Cable cross-section, input side	0.75 ... 1.5 mm²
Cable cross-section, output side	0.5 ... 1.5 mm²
Cable outside diameter, input side	Max: 5.0mm Min: 3.0mm
Cable outside diameter, output side	Max: 5.0mm Min: 3.0mm
Wire preparation length, input side	7...8mm
Wire preparation length, output side	7...8mm
Length	97.6±0.2mm
Width	40.5±0.2mm
Height	25.5±0.15mm
Colors & materials	
Casing material	PC
Casing color	White
Temperature & operating conditions	
Ambient temperature range	-20 ... +45°C
Maximum temperature at tc test point	70°C
Temperature range at storage	-30 ... +80℃ (6 months in Class I environment)
Humidity range at storage	10-90%RH (no condensation)
Humidity during operation	20-90%RH
RoHS	RoHS 2.0 (EU) 2015/863

Tc test point (Unit: mm)

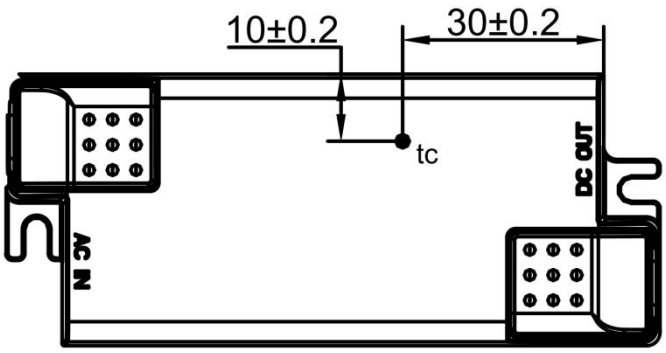

Note: The picture is a front view, and the Tc point is on the front of the product.

Product terminal

Input		Output	
AC-L	AC live wire input	**LED+**	Positive terminal output of LED driver
AC-N	AC neutral wire input	**LED-**	Negative terminal output of LED driver

Capabilities

Dimmable	-
Over-temperature protection	-
Overload protection	-
Short circuit protection	Automatic reversible
No-load protection	<55V
Suitable for fixtures with prot. class	II
Control interface	-
Output interface	1 channel

Programming

Programming device	-
DALI control software	-
APP	-

Certificates & standards

Approval marks – approval	ENEC, CB, CE, RCM, CCC
Standards	GB/T 19510.1, GB/T 19510.213, GB/T 7000.1 GB 17625.1, GB/T 17743 IEC/EN 61347-2-13, IEC/EN 61347-1, IEC/EN 62493 IEC/EN 62384 AS 61347.1, AS 61347.2.13
EMC	GB 17625.1, GB/T 17743 EN 55015, EN 61547, EN 61000-3-2,3
Type of protection	IP20

Logistical data

Product	Packaging unit (Pieces/Unit)	Dimensions (L*W*H)	Volume	Gross weight
LF-GIF040HAxxxxH	140	385mm*285mm*223mm	24.46 dm³	11.06kg±5%

Test equipment & condition

Test equipment	AC power source: CHROMA6530, digital power meter: CHROMA66205, oscilloscope: Tektronix DPO3014, DC electronic load: M9712B, LED board, constant temperature and humidity chamber, lightning surge generator: Everfine EMS61000-5B, rapid group pulse generator: Everfine EMS61000-4A, spectroanalyzer: KH3935, hi-pot tester: EEC SE7440, flicker tester (flicker-free coefficient test): Everfine LFA-3000, etc.

If there are no special remarks, the above parameters are tested at the ambient temperature of 25℃, humidity of 50%, maximum output power and input voltage of 230Vac/50Hz.

Additional information

1. It is recommended that user install the over voltage protection, under voltage protection and surge protection devices in the power supply circuits of light fixtures to ensure electricity safety.

2. The LED driver used in combination with the end device is one of the accessories of the whole light fixture, and the EMC of the whole light fixture is not only susceptible to the driver itself, but to the LED light fixture and the whole light fixture's wiring. Thus, the manufacturer of LED light fixture should re-confirm the EMC of the whole light fixture before the whole light fixture is finished.

3. The number of LED drivers that can be connected to a circuit breaker and the inrush current are tested under the same conditions.

4. The PC cover, casing and end cap for assembling the LED driver in the light fixture must meet the fire rating of UL94-V0 or above.

Transportation & storage

Suitable transportation means: vehicles, boats and aeroplanes.

In transit, it is necessary to prepare awnings for rain or sun protection. Moreover, please keep civilized loading and unloading to prevent the vibration or impact on LED driver as much as possible.

The storage of LED driver shall conform to the standard of Class I environment.

1. When using the products which have been stored for more than 6 months, please re-test their electrical parameters firstly by powering on. Do not use them unless they are tested to be qualified.

2. When using the products which have been stored for 6 to 12 months, please run them on power for more than 2 hours firstly.

3. When using the products which have been stored for more than 12 months, please conduct an actual assessment of quality risks firstly. Direct use is not recommended.

Cautions

Please use Lifud LED driver according to its parameters in the specification, otherwise the LED driver may malfunction.

Using any incompatible light fixtures or those that have not been certified may cause fire, explosion or other risks.

Man-made damage is beyond the scope of Lifud warranty service.

Disclaimer

Subject to change without notice. Errors and omissions excepted. Always make sure to use the most recent release.

Lifud Technology Co., Ltd. reserves the right to interpret any content of this specification.