TC Series (8–10 W)

High-Power LED Module

Part No: SL-TCT50XW-70-LG-70-D120-10W

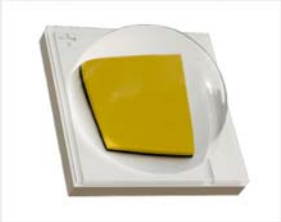

Features	Applications
• Size: 5.0 × 5.0 mm • Power: 8–10 W High-Power LED • Suitable for all SMT assembly and solder processes • Moisture Sensitivity Level: Level 2a	• Wide range of lighting applications • Commercial, residential and industrial luminaires

Dimensions

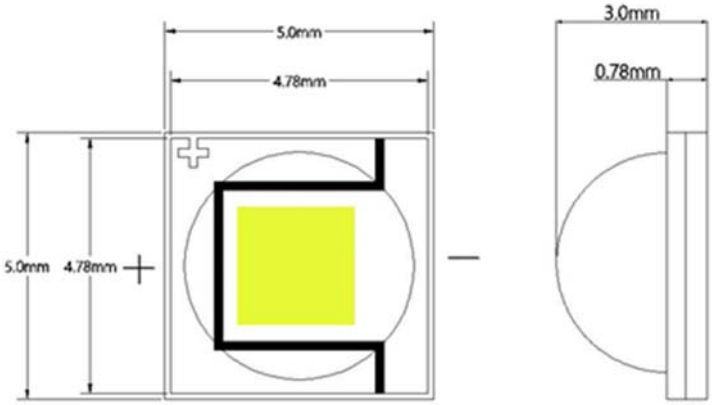

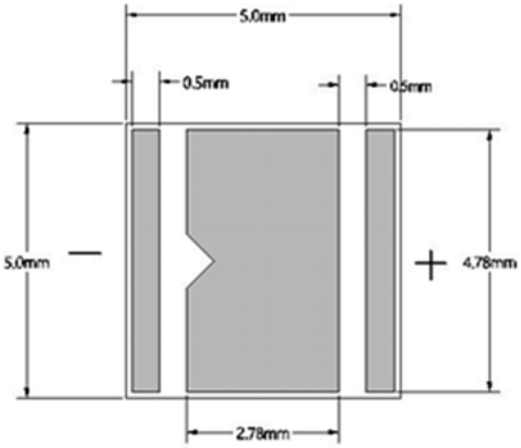

Note: All dimensions in millimetres. Tolerance ± 0.1 mm.

Material Description

Part Number	Chip Material	Lens Type
SL-TCT50XW-70-LG-70-D120-10W	InGaN	Yellow Diffusion

Part Number Key

Code	Meaning
TCT	Ceramic series. T = convex top, P = flat top
50	Package size designation (5.0 × 5.0 mm)
XW	Emission colour (XW = Extra White)
70	Colour Rendering Index (CRI ≥ 70)
LG	Chip type
70	Colour Temperature bin code (6500–8000 K)
D120	Beam angle (120°)
10W	Rated power (10 W)

Absolute Maximum Ratings (TA = 25°C)

Parameter	Symbol	Rating	Unit
Forward Current (max)	IF	3500	mA
Pulsed Forward Current (1/10 duty, 0.1 ms)	IFP	3800	mA
Test Current	IFP	700	mA
Power Dissipation (max)	PD	10	W
Reverse Voltage	VR	5	V
Electrostatic Discharge (HBM)	ESD	4000	V
Operating Temperature	Topr	-40 to +105	°C
Storage Temperature	Tstg	-40 to +105	°C
Junction Temperature	Tj	150	°C
Thermal Resistance (Junction → Solder)	RTHJS	20	°C/W

Note: Pulsed conditions — 1/10 duty cycle, 0.1 ms pulse width.

Electrical / Optical Characteristics (TA = 25°C)

Colour Temp. (K)	CRI (Ra)	Luminous Flux (lm)	Forward Voltage (V)	Test Condition
6500–8000	70	330–370	2.8–3.6	IF = 700 mA

Parameter	Symbol	Min	Typ	Max
Luminescence Half-Angle	2θ½	—	120°	—

1. 2θ½ is the half-angle at which luminous intensity is 50% of the on-axis value.
2. Luminous flux measurement tolerance: ±15%.
3. CRI measurement tolerance: ±2.
4. Forward voltage measurement tolerance: ±0.1 V.

Bin range v Chromaticity Coordinates

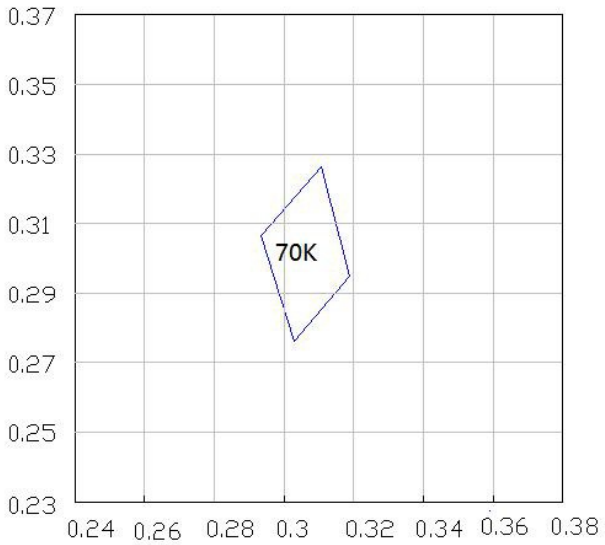

Chromaticity Coordinate Bin Range

CCT	Bin	CIE x	CIE y
6500–8000 K	70K	0.2936	0.3064
		0.3109	0.3263
		0.3187	0.2949
		0.3031	0.2761

7

SEAM Semiconductors

典型光学特性曲线 Typical optical characteristics curves

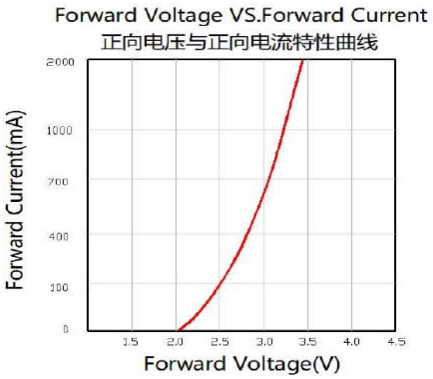

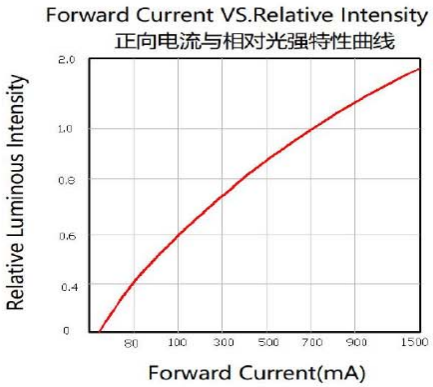

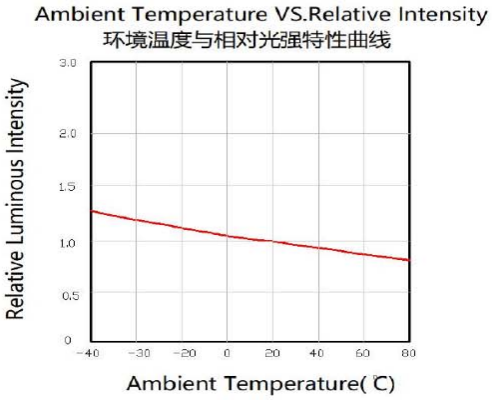

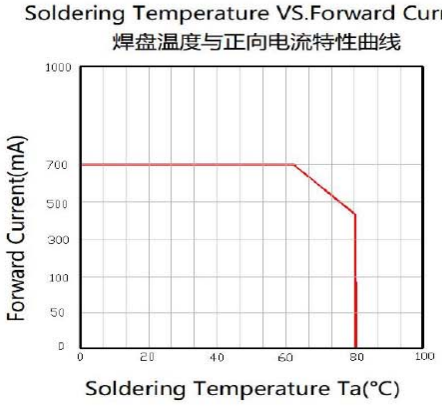

Typical Optical Characteristics Curves

8

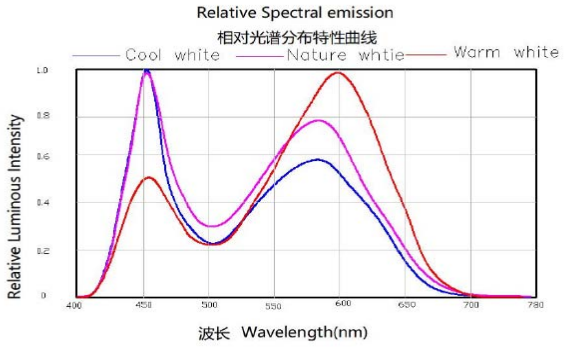

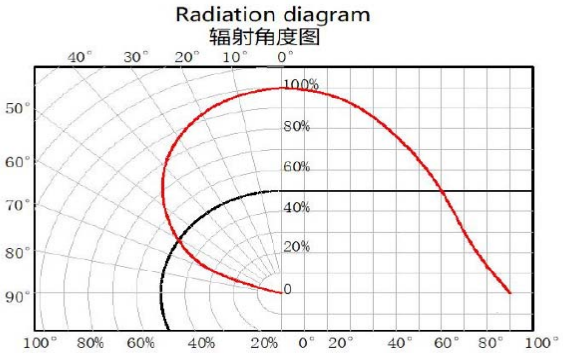

Reliability Test Items and Conditions

Test Item	Ref. Standard	Test Condition	Duration	Qty	Accept/Reject
Reflow Soldering	IEC/TR 60068-3-12-2014	260°C, max 8 s	3×	22	0/1
Temperature Cycling	IEC 60068-2-14:2009	105°C ↔ -40°C, 15 min each	300 cyc	22	0/1
High Humidity & Heat Life	IEC 60068-2-78:2001	85°C / 85% RH, IF = 700 mA	500 h	22	0/1
High Temp. Storage	Internal standard	105°C ±5°C	1000 h	22	0/1
Low Temp. Storage	IEC 60068-2-1:2007	-40°C ±5°C	1000 h	22	0/1
Life Test (ambient)	Internal standard	25°C ±5°C, IF = 700 mA	1000 h	22	0/1

Failure Criteria

Test Item	Symbol	Test Condition	Min	Max
Forward Voltage	VF	IF = 700 mA	—	USL × 1.1
Reverse Current	IR	VR = 5 V	—	10 µA
Luminous Flux	lm	IF = 700 mA	LSL × 0.7	—

USL = Upper Specification Limit LSL = Lower Specification Limit

SMT Reflow Soldering Instructions

回流焊说明 SMT Reflow Soldering Instructions SMT

有铅回焊 Lead Solder

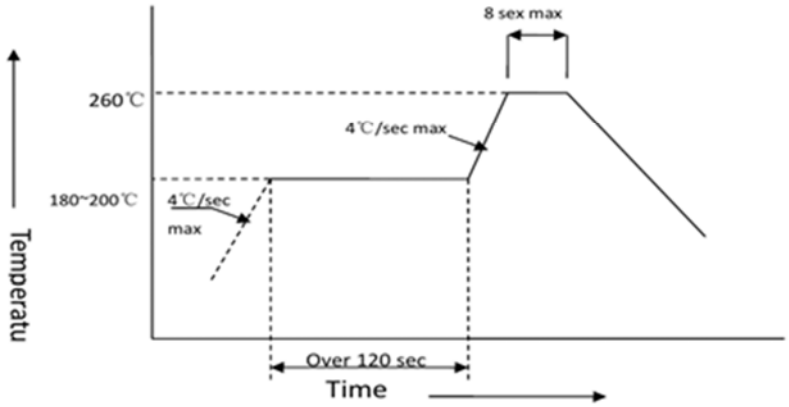

无铅回焊 Lead-Free Solder

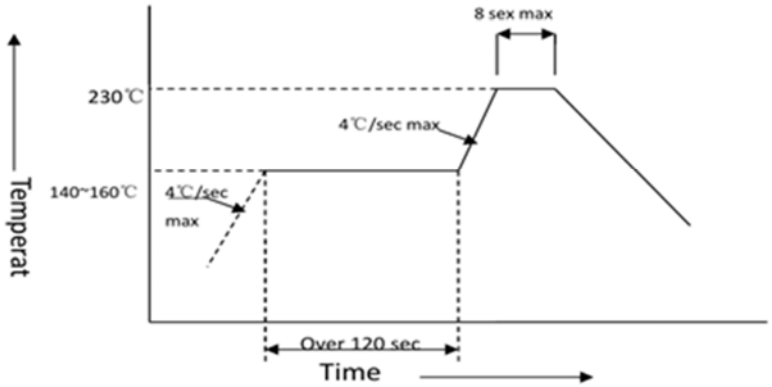

Packaging

Packing unit: 1002 pcs / reel

Cover tape adhesion strength: 0.1–0.7 N (measured at 10° peel angle from carrier tape).

SMD LED Handling and Storage

1. Incoming Inspection

Check the packaging for air leaks or physical damage. Verify that the label matches your requirements. Contact us immediately if any abnormality is found.

2. Storage (Sealed Bag)

Do not open bags for components not yet required. Store sealed reels in a moisture-proof cabinet: 0–40°C, relative humidity ≤60%. Shelf life: 6–12 months. Always perform a first-article inspection before production, regardless of storage duration.

3. After Opening the Bag

Schedule production immediately after opening. Due to varying warehouse conditions, aim to consume the opened reel within 24 hours.

4. Do Not Mix Batches

Test per first-article inspection criteria before production. Do not mix lamp beads from different batches on the same production run. If unavoidable, verify old packaging is intact, perform a first-article confirmation, and keep finished goods from each batch separately identified.

5. Post-Opening Storage (Not Recommended)

Calculate production-line demand accurately to avoid leftover components. If storage after opening is unavoidable, reseal the packaging to prevent lead oxidation.

6. Reflow Soldering

Pass the populated PCB through reflow soldering as soon as possible after SMT placement. Verify that ESD protection measures are in place throughout soldering and assembly.

7. Burn-In Before Shipment

Burn-in finished luminaires for 4–8 hours before shipment to improve adhesion between chip and encapsulant, enhancing long-term reliability.

8. Installed Outdoor Luminaires

If commissioned luminaires cannot be put into service immediately, perform monthly maintenance burn-in: illuminate all chips at low current (no scanning program) for 2 hours, then gradually increase current for a further 4 hours of steady-state burn-in. During initial operation set the controller speed and colour-change rate to minimum.