LIGITEK ELECTRONICS CO.,LTD.
Property of Ligitek Only

LED SMD

Lead-Free Parts

LG-192WK-DT-A07

DATA SHEET

DOC. NO : QW0905-LG-192WK-DT-A07A

REV. : A

DATE : 19 - Jul. - 2017

發行
立碁電子
DCC

Features:

1. Package in 8.0mm carrier tape on 7" diameter reel.
2. Compatible with automatic placement equipment.
3. Compatible with reflow solder process.

Descriptions:

1. The LG-192 SMD Taping is much smaller than lead frame type components, thus enable smaller board size, higher packing density, reduced storage space and finally smaller equipment to be obtained.
2. Besides, lightweight makes them ideal for miniature applications. etc.

Applications:

1. Automotive : backlighting in dashboard and switch.
2. Telecommunication : indicator and backlighting in telephone and fax.
3. Flat backlight for LCD, switch and symbol
4. General use.

Device Selection Guide:

PART NO	MATERIAL	COLOR	
		Emitted	Lens
LG-192WK-DT-A07	InGaN	White	Yellow Diffused

Package Dimensions

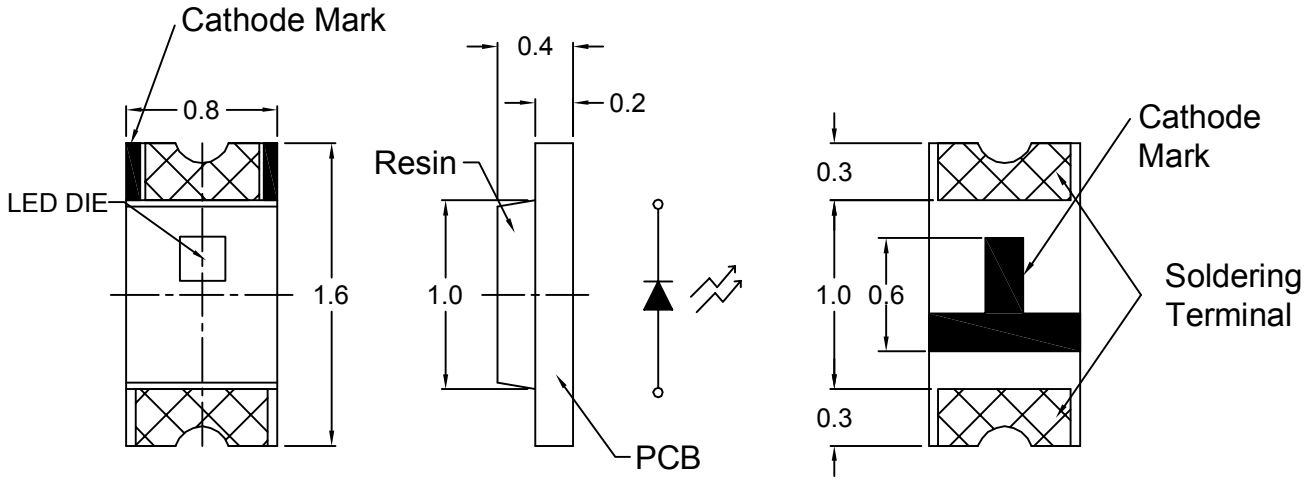

Note : 1.All dimension are in millimeter tolerance is ±0.1mm unless otherwise noted.
2.Specifications are subject to change without notice.

Recommended Soldering Pad Dimensions

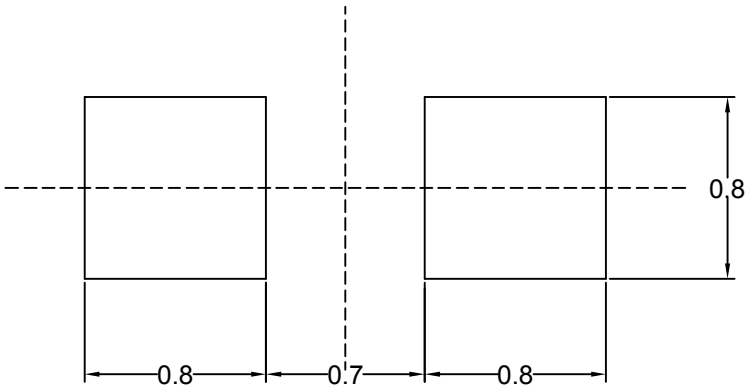

Note : The tolerances unless mentioned is ±0.1mm,Angle±0.5. Unit=mm.

Absolute Maximum Ratings at Ta=25 ℃

Parameter	Symbol	Ratings	**UNIT**
Power Dissipation	PD	72	mW
Peak Forward Current Duty 1/10@10KHz	I_{FP}	100	mA
Forward Current	I_F	20	mA
Reverse Current @5V	Ir	10	μA
Electrostatic Discharge	ESD	500	V
Operating Temperature	T_{opr}	-40 ~ +85	℃
Storage Temperature	Tstg	-40 ~ +100	℃

Typical Electrical & Optical Characteristics (Ta=25 ℃)

Items	Symbol	Min.	Typ.	Max.	UNIT	CONDITION
Luminous Intensity	Iv	700	----	1250	mcd	IF=20mA
Chromaticity Coordinates	X	0.28	----	0.31	----	IF=20mA
	Y	0.255	----	0.34	----	IF=20mA11
Forward Voltage	V_F	2.8	----	3.6	V	IF=20mA
Viewing Angle	2θ 1/2	----	130	----	deg	IF=20mA

Note : 1.The forward voltage data did not including ±0.1V testing tolerance.
2. The luminous intensity data did not including ±15% testing tolerance.
3.The color coordinates measurememt allowance is ±0.01 testing tolerance

Luminous Intensity Classification

BIN CODE	Iv(mcd) at20mA	
	Min.	Max.
U	700	800
V-1	800	1000
V-2	1000	1250

Forward Voltage Classification

BIN CODE	Vf(v) at20mA	
	Min.	Max.
1	2.8	3
2	3	3.2
3	3.2	3.4
4	3.4	3.6

Chromaticity Coordinates Specifications For Bin Grading

Color Coordiante at 20mA								
BIN CODE	1		2		3		4	
	X	Y	X	Y	X	Y	X	Y
B3	0.28	0.295	0.28	0.255	0.29	0.27	0.29	0.31
B4	0.29	0.31	0.29	0.27	0.3	0.285	0.3	0.325
B5	0.3	0.325	0.3	0.285	0.31	0.3	0.31	0.34

CIE Chromaticity Diagram

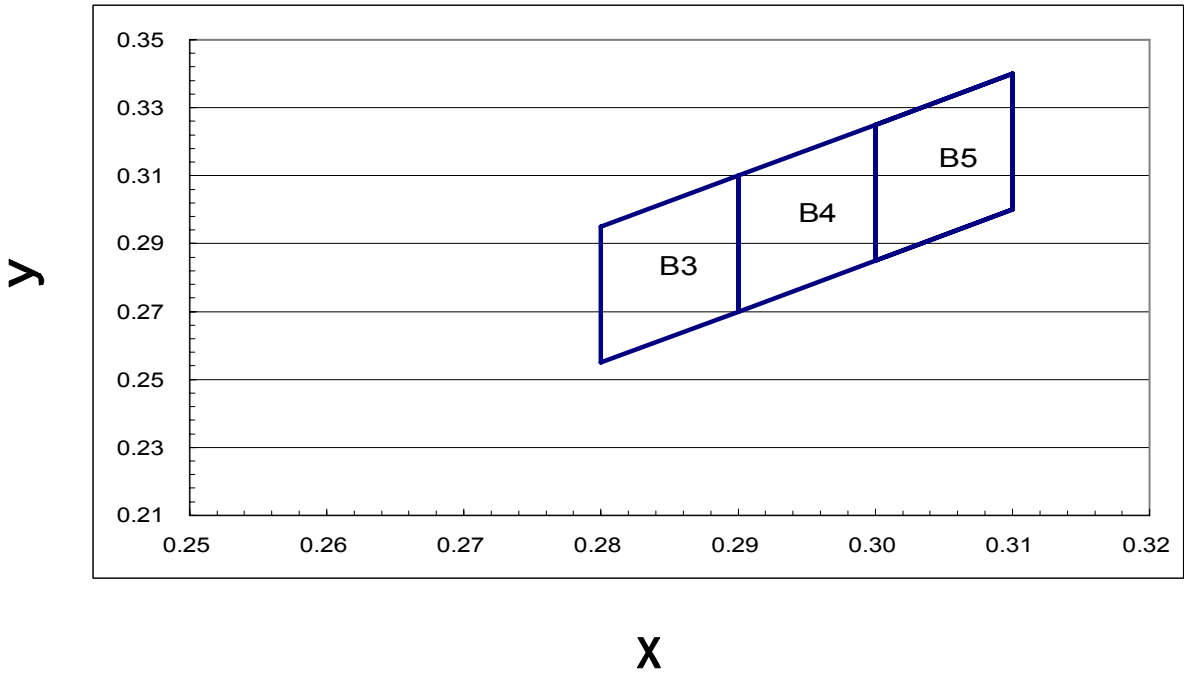

Typical Electro-Optical Characteristics Curve

WK CHIP

Fig.1 Forward current vs. Forward Voltage

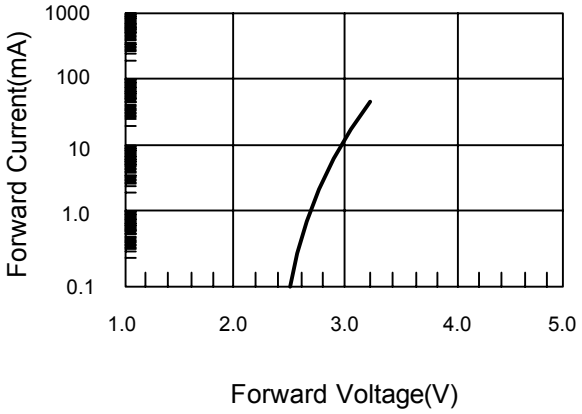

Fig.2 Relative Intensity vs. Forward Current

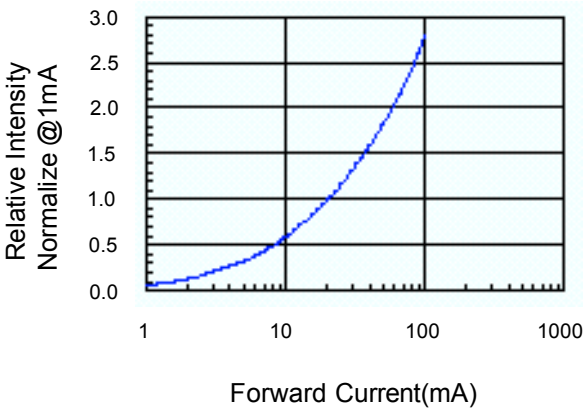

Fig.3 Forward Current vs. Temperature

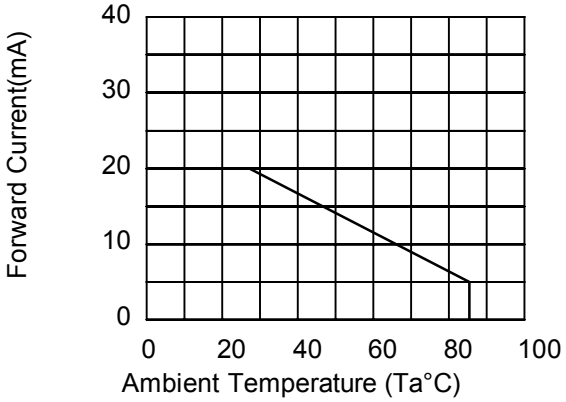

Fig.4 Relative Intensity vs. Temperature

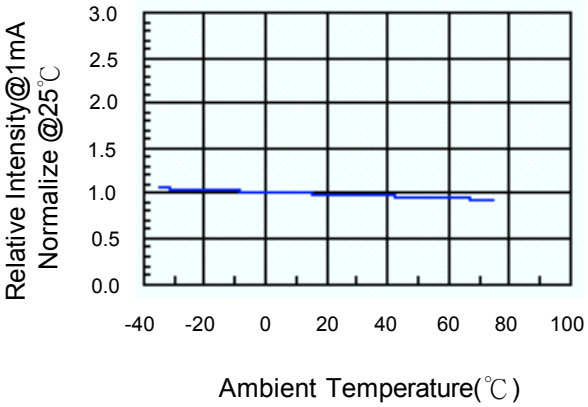

Fig.5 Luminous Spectrum(Ta=25℃)

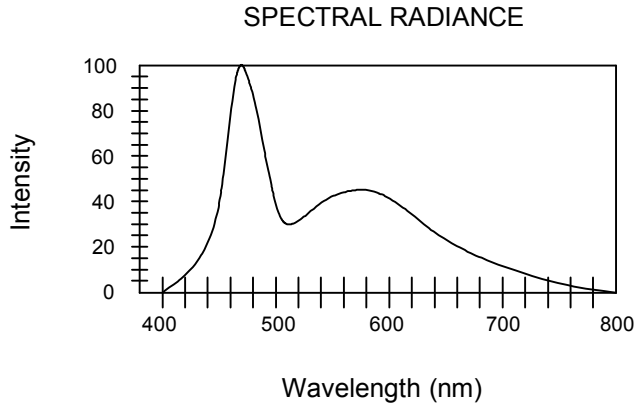

Fig.6 Directive Radiation

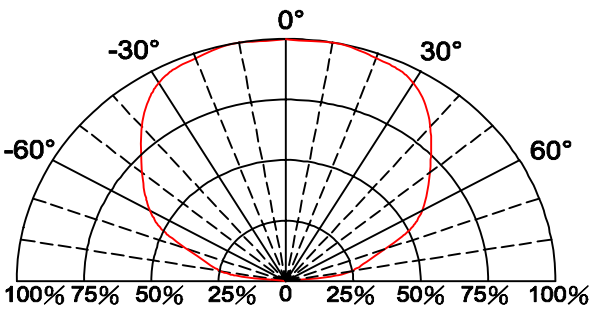

Carrier Tape Dimensions

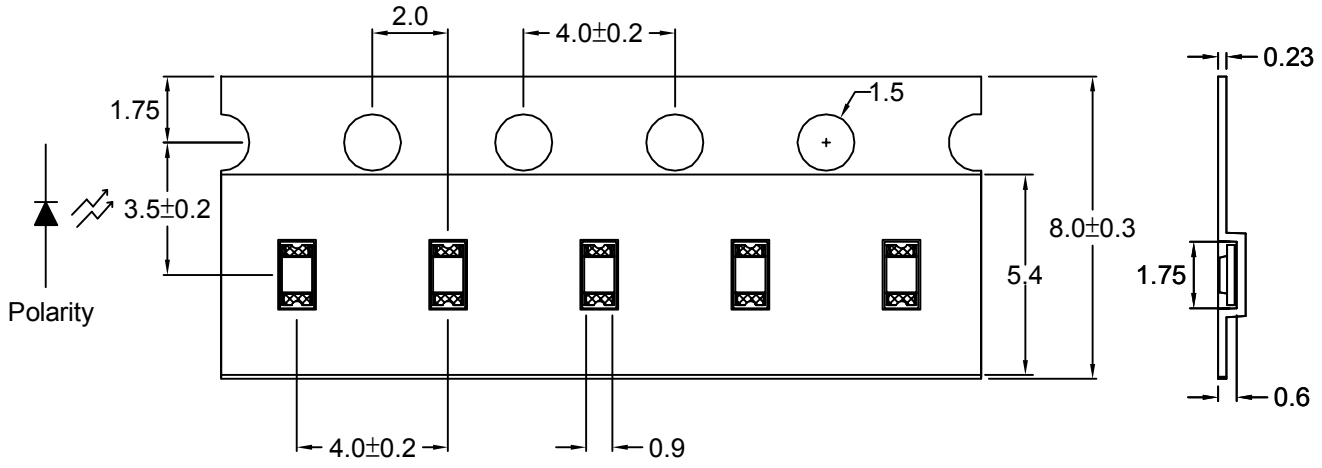

Note : The tolerances unless mentioned is ±0.1mm,Angle ± 0.5. Unit=mm.

- Packing Specifications

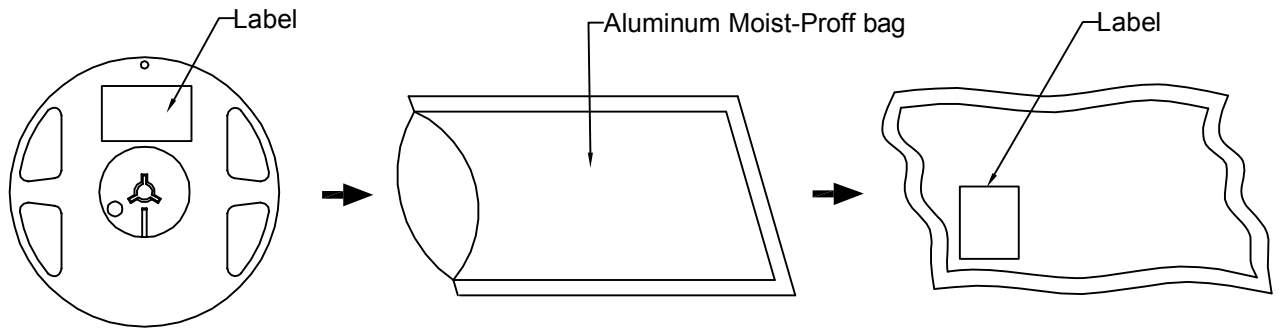

Part No.	Description	Quantity/Reel
LG-192WK-DT-A07	8.0mm tape,7"reel	4000 devices

Label Explanation

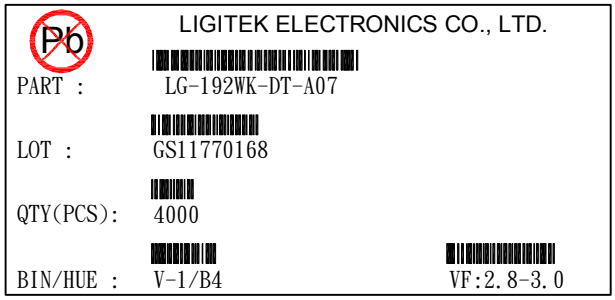

BIN : Luminous Intensity

HUE : Chromaticity Coordinates (CIE_x , CIE_y)

VF : Forward Voltage

Reel Dimensions

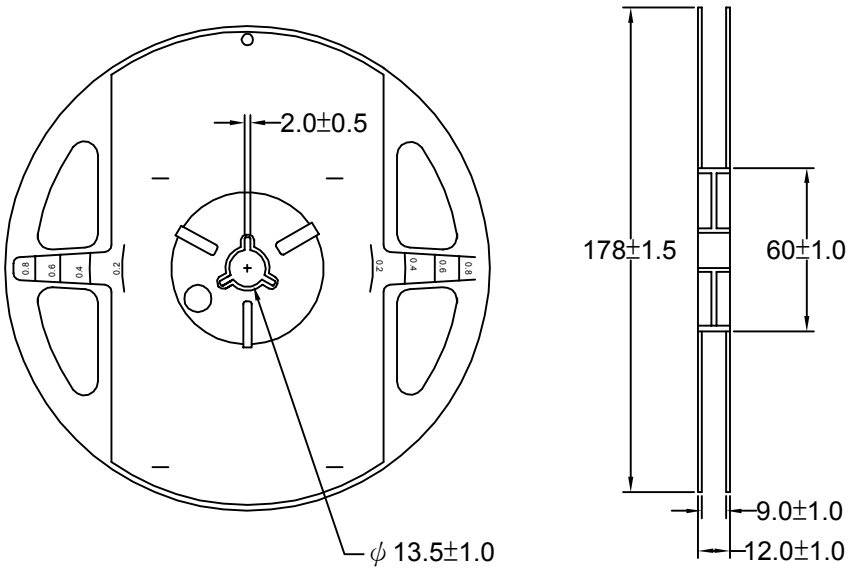

Box Explanation

1. 5 BAG / INNER BOX
2. INNER BOX SIZE : L X W X H 23cm X 8.5cm x 26cm

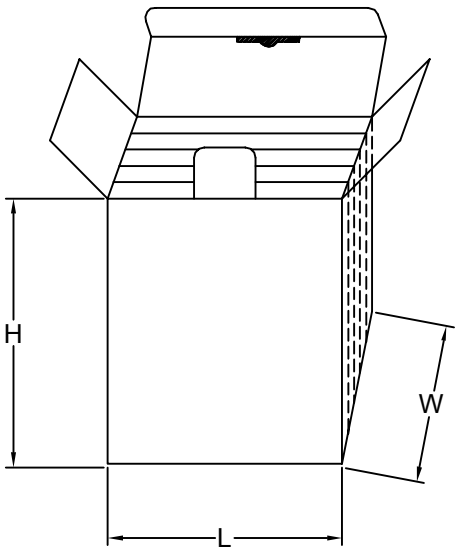

3. 10 INNER BOXES / CARTON
4. CARTON SIZE : L X W X H 58cm X 34cm x 35cm

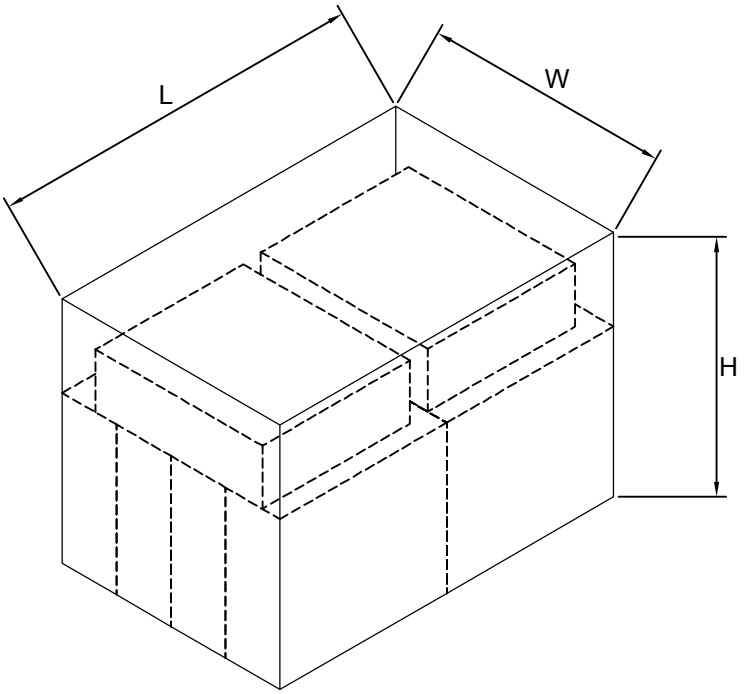

Recommended Soldering Conditions

1. Hand Solder
   Basic spec is ≦ 280℃ 3 sec one time only.

2. PB-Free Reflow Solder

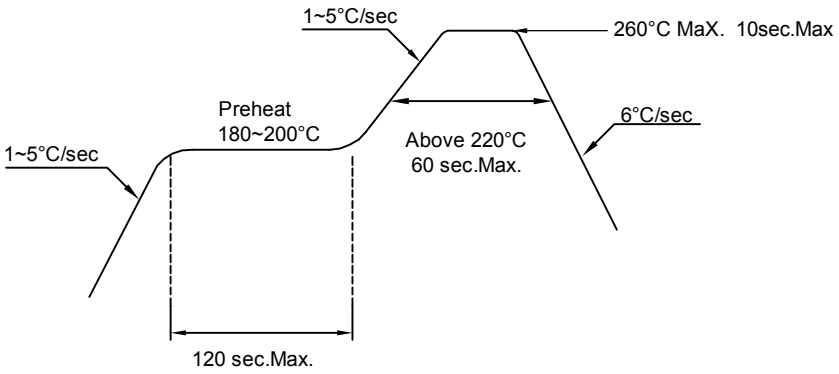

Note:
1.Reflow soldering should not be done more than two times.
2.When soldering,do not put stress on the LEDs during heating.
3.After soldering,do not warp the circuit board.

Precautions For Use:

Storage time:

1. Calculated shelf life before opening is 18 months at < 30°C and < 90% relative humidity (RH)
2. After bag is opened, devices which will be subjected to reflow soldering or other high temperature processes must be
   a) Assemblied within one years in an environment of ≦ 30°C / 60% RH, or
   b) Stored at ambient of 10% RH or less
3. Devices are required baking before assembly if:
   a) Humidity Indicator Card reads >10% (for level 2a -5a)
      or >60% (for level 2) at ambient temperature 23±5°C
   b) 2.a) or 2.b) doesn't meet
4. If baking is required, devices should be baked for >72 hours at 60±5°C/ 5% RH.Performing baking only once, and using the baked devices within 72 hours..

Drive Method:

LED is a current operated device, and therefore, requirer some kind of current limiting incorporated into the driver circuit. This current limiting typically takes the form of a current limiting resistor placed in series with the LED.
Consider worst case voltage variations than could occur across the current limiting resistor. The forward current should not be allowed to change by more than 40% of its desired value.

Circuit model A

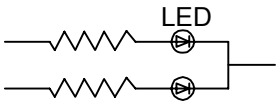

Circuit model B

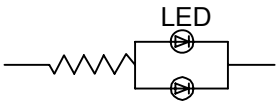

(A) Recommended circuit.
(B) The difference of brightness between LED could be found due to the VF-IF characteristics of LED.

Cleaning:

Use alcohol-based cleaning solvents such as isopropyl alcohol to clean the LED.

ESD(Electrostatic Discharge):

Static Electricity or power surge will damage the LED. Use of a conductive wrist band or anti-electrosatic glove is recommended when handing these LED. All devices, equipment and machinery must be properly grounded.

Reliability Test:

Classification	Test Item	Test Condition	Sample Size
Endurance Test	Operating Life Test	1.Ta=25°C 2.If=20mA 3.t=1000 hrs (-24hrs,+72hrs)	22
	High Temperature Storage Test	1.Ta=100°C±5°C 2.t=1000 hrs (-24hrs,+72hrs)	22
	Low Temperature Storage Test	1.Ta=-40°C±5°C 2.t=1000 hrs (-24hrs,+72hrs)	22
	High Temperature High Humidity Storage Test	1.Ta=85°C 2.RH=85% 3.t=1000hrs(-24hrs,+72hrs)	22
Environmental Test	Thermal Shock Test	1.Ta=100°C±5°C ~ -40°C±5°C 20min/ 10sec / 20min 2.total 100 cycles	22
	Temperature Cycling	1.100°C±5°C ~ -40°C±5°C 30mins / 5mins / 30mins 2.100 Cyeles	22
	IR Reflow	1.T=260°C Max. 10sec.Max. 2. 6 Min	22