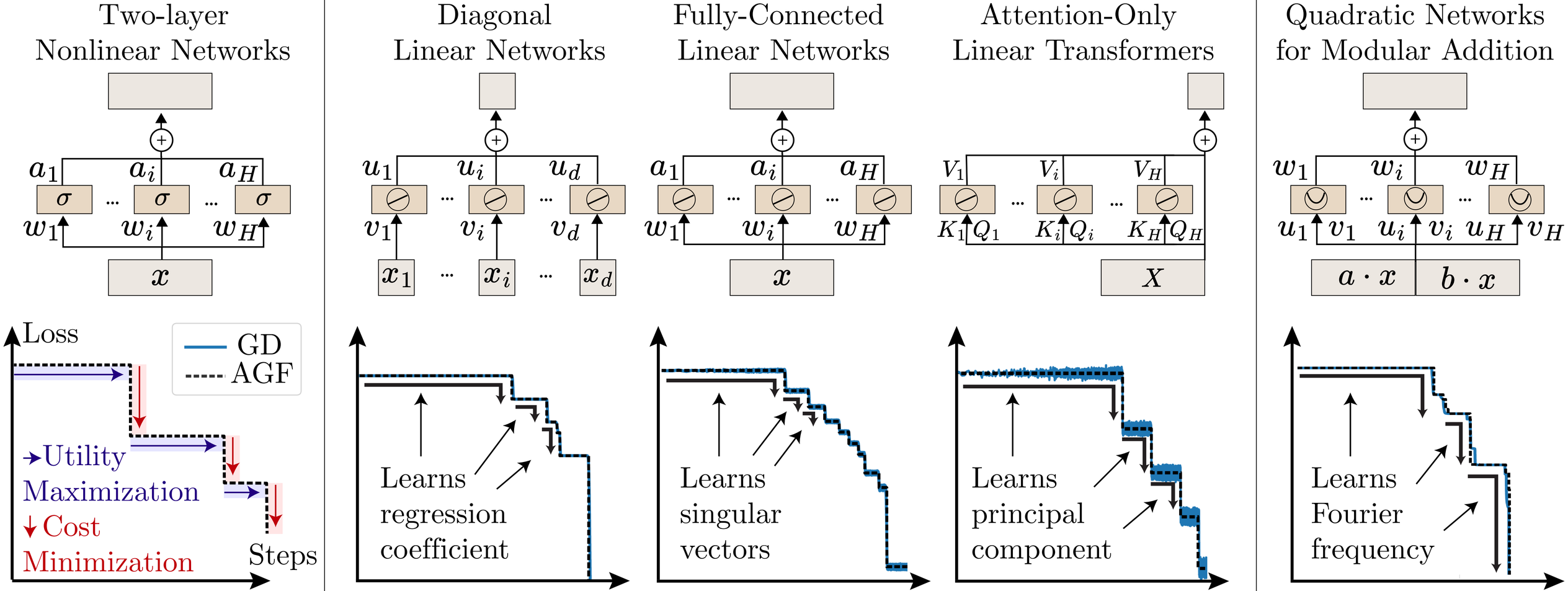
Two-layer Nonlinear Networks
Diagonal Linear Networks
Fully-Connected Linear Networks
Attention-Only Linear Transformers
Quadratic Networks for Modular Addition
a_1 a_i a_H
σ σ σ
w_1 w_i w_H
x
u_1 u_i u_d
v_1 v_i v_d
x_1 x_i x_d
V_1 V_i V_H
K_1 Q_1 K_i Q_i K_H Q_H
X
$a \cdot x$ $b \cdot x$
Loss
GD
AGF
Utility Maximization
Cost Minimization
Steps
Learns regression coefficient
Learns singular vectors
Learns principal component
Learns Fourier frequency