WiFi-Connected Light

This is an ESP32 with a custom power supply circuit. It connected non-destructively to my room's light switch, and allowed for remote access via WiFi.

After seeing an ESP32 on sale for a few dollars, and learning it had WiFi and Bluetooth connectivity, I was immediately interested. I came up with this project to get some experience working with the micro controller.

I also designed a 3D printed bracket and used the Adafruit IO API to connect to the internet.

Skills Learned: Soldering, ESP32, 3D Printing

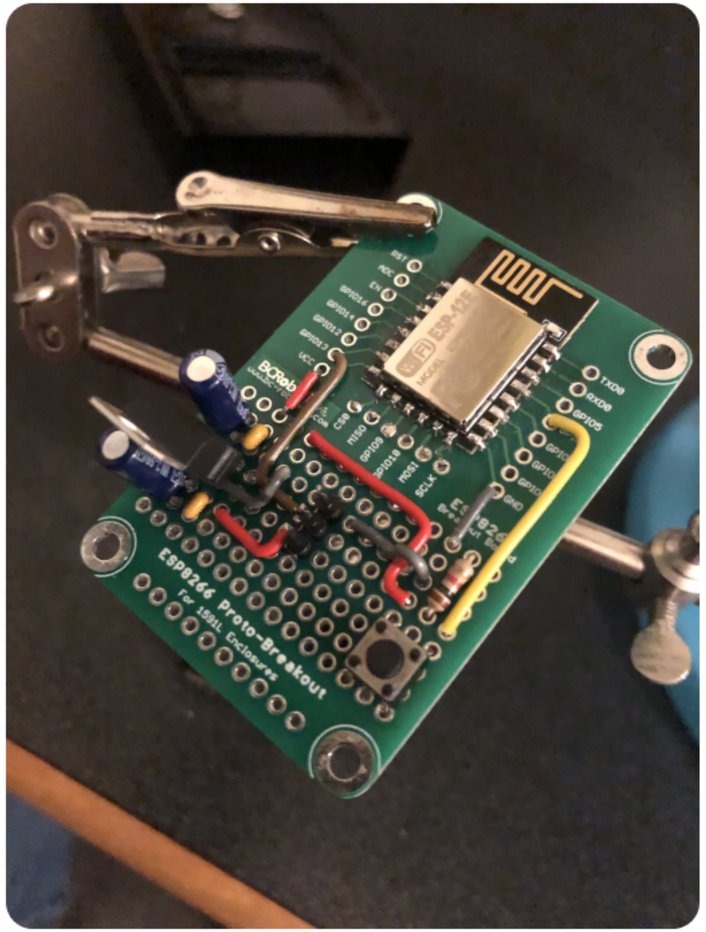

Artemis: 8-bit computer

Artemis is a fully functioning, Turing complete computer that I built from discrete logic components.

Inspired by Ben Eater's YouTube channel, this project is the culmination of a summer's worth of research into computer architecture, digital logic, and PCB design.

Working on completing Artemis was extremely rewarding, as I now have a rich understanding of how modern computing systems work at their lowest level.

Skills Learned: KiCAD, Logisim, Assembly

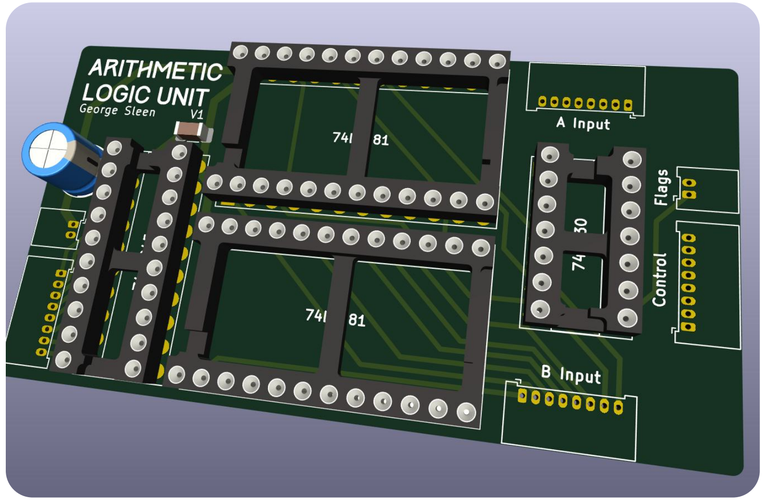

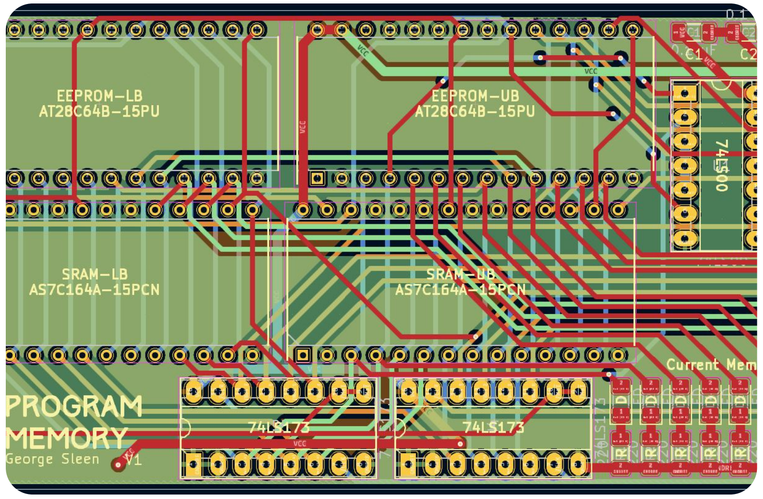

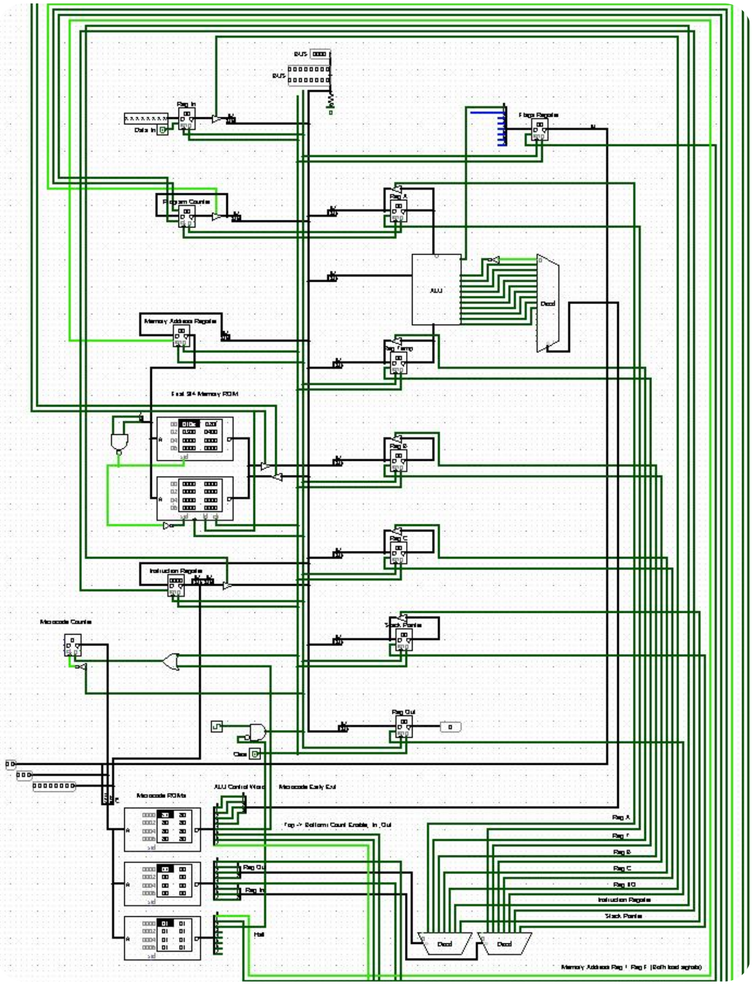

SUBC: UBC's Submarine Design Team

As UBC's oldest design team, we build human powered submarines for international competitions

TEAM CAPTAIN

As team captain, I led a team of over 50 students in the creation of a brand new submarine design from scratch. I juggled internal and external deadlines, as well as coordinated collaboration between teams and individuals.

PROPULSION SYSTEMS CO-LEAD

As propulsion co-lead, I was responsible helping a team of students research, design, and justify all propellers for use in competition

DRIVECHAIN AND PROPULSION MEMBER

As part of the drivechain and propulsion team, I did extensive research into novel proplusion systems and helped rebuild the drive mechanism