Nordic Semiconductor ASA

nRF52832 Bluetooth Smart/ANT/2.4GHz RF Development Board (PCA10040)

Sheet 1: Cover
Sheet 2: nRF Radio
Sheet 3: Pin Map
Sheet 4: Interface MCU
Sheet 5: Buttons and LEDs
Sheet 6: Connectors
Sheet 7: Power Supply

The No ERC object is a design directive.
This directive is placed on a node in the circuit to suppress reported warnings and/or error violation conditions that are detected when the schematic project is compiled.

Cover			NORDIC SEMICONDUCTOR
Size: A3	Project Number: 4397	Revision: 2.0.0	
Date: 11.02.2019		Sheet 1 of 7	
File: sheet1_cover.SchDoc		Drawn By: KJP/RUBR/GETR	

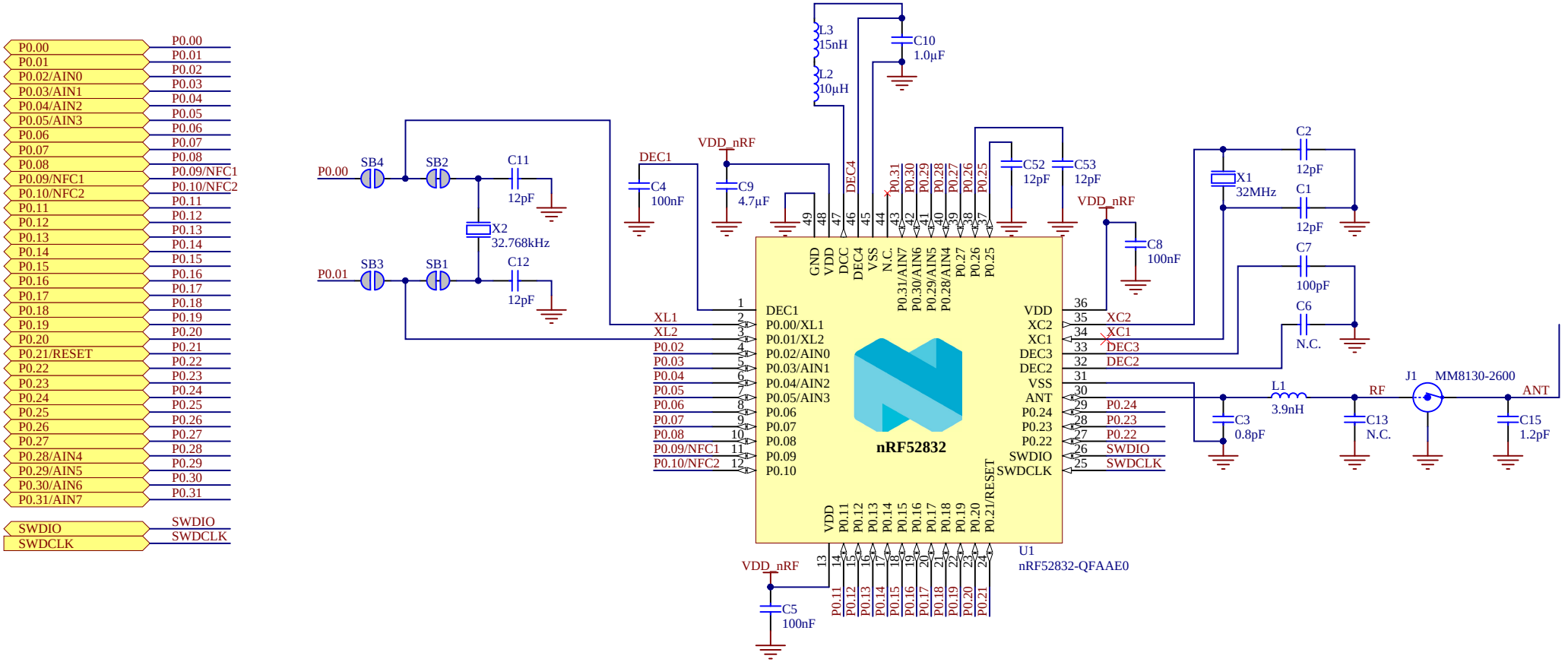

Title: nRF Radio		
Size: A4	Project Number: 4397	Revision: 2.0.0
Date: 11.02.2019		Sheet 2 of 7
File: sheet2_radio.SchDoc		Drawn By: KJP/RUBR/GETR

GPIO pin mapping

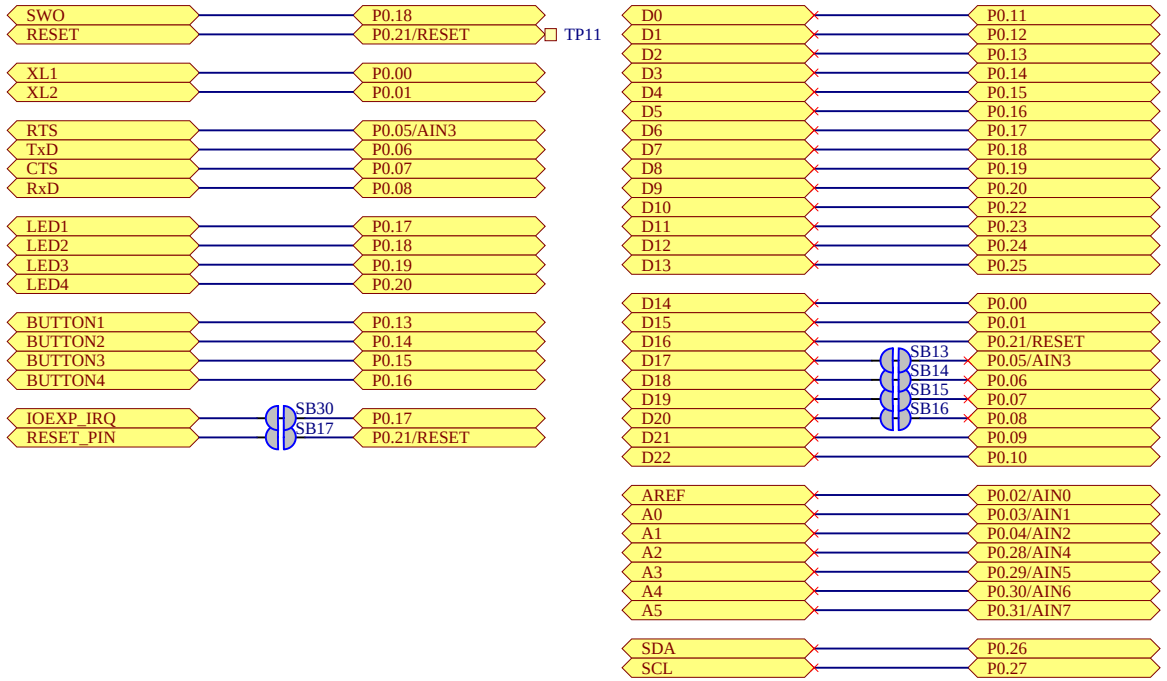

Title: Pin Map		
Size: A4	Project Number: 4397	Revision: 2.0.0
Date: 05.03.2019		Sheet 3 of 7
File: sheet3_pin_map.SchDoc		Drawn By: RUBR/GETR

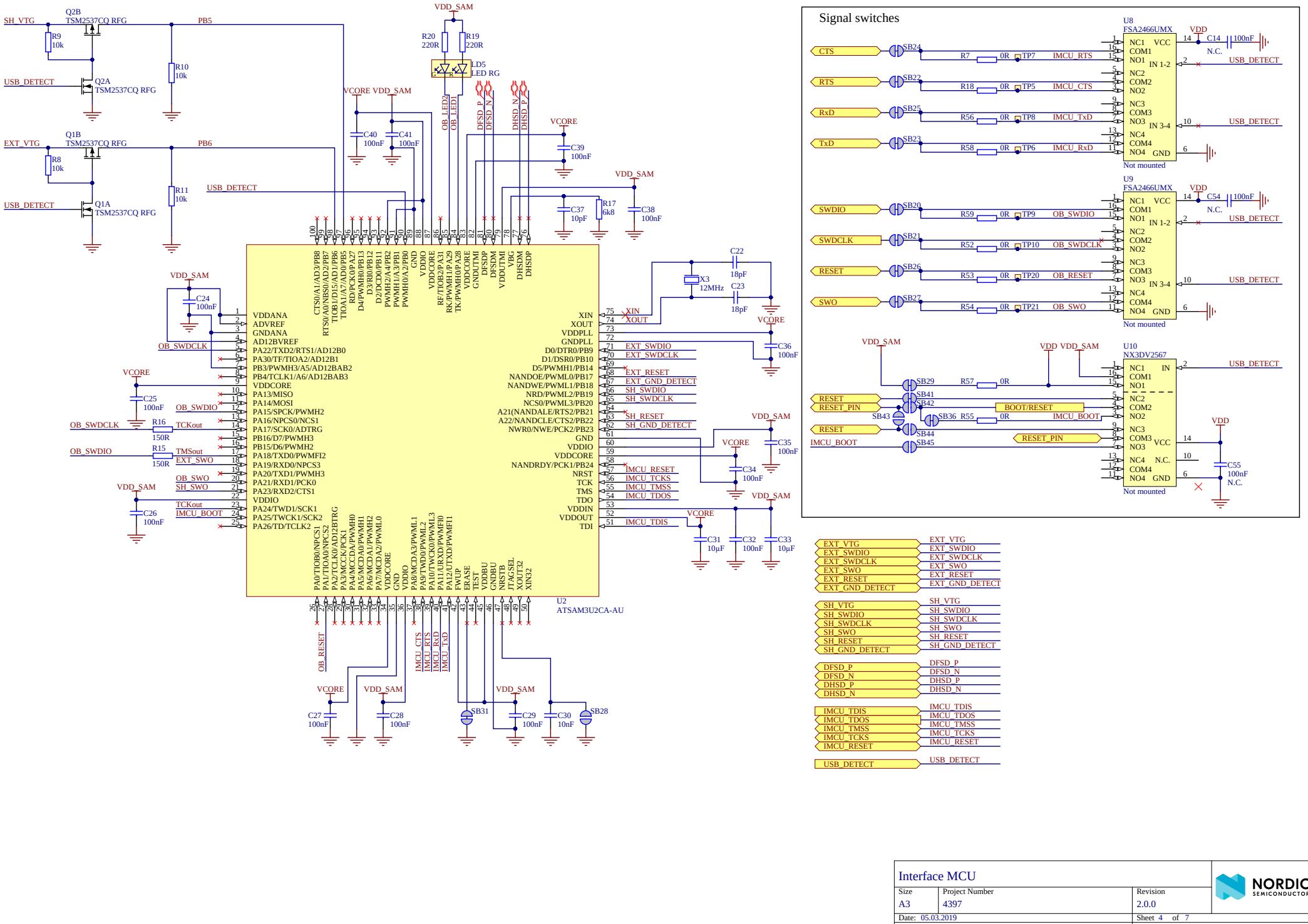
Signal switches
U8
FSA2466UMX
U9
FSA2466UMX
U10
NX3DV2567
Not mounted
U2
ATSAM3U2CA-AU
Interface MCU
Size
A3
Project Number
4397
Revision
2.0.0
Date: 05.03.2019
Sheet 4 of 7
File: sheet4_interface_mcu.SchDoc
Drawn By: KJP/RUBR/GETR
NORDIC SEMICONDUCTOR

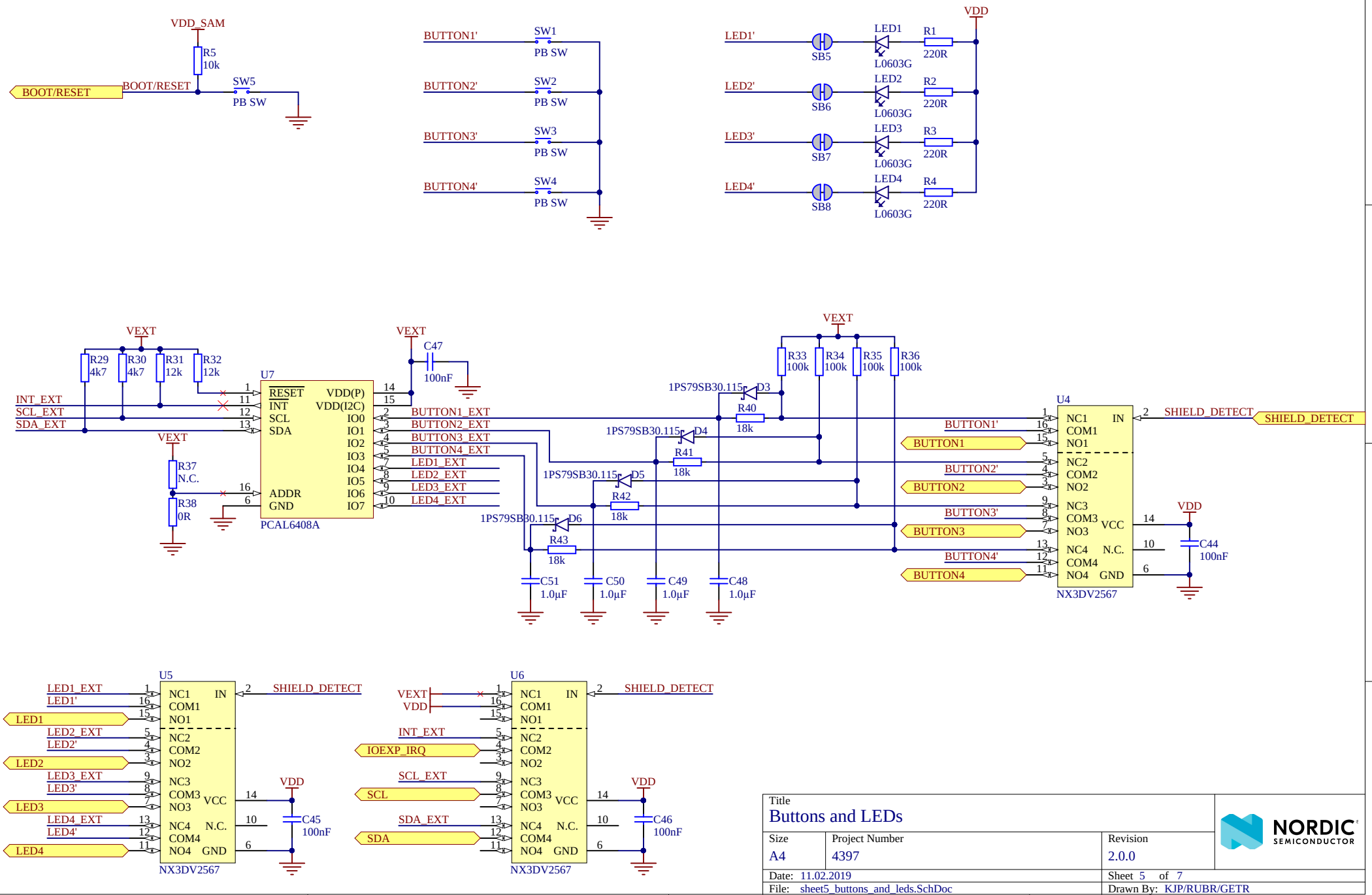

Title: Buttons and LEDs		
Size: A4	Project Number: 4397	Revision: 2.0.0
Date: 11.02.2019		Sheet 5 of 7
File: sheet5_buttons_and_leds.SchDoc		Drawn By: KJP/RUBR/GETR

Arduino Interface Connectors

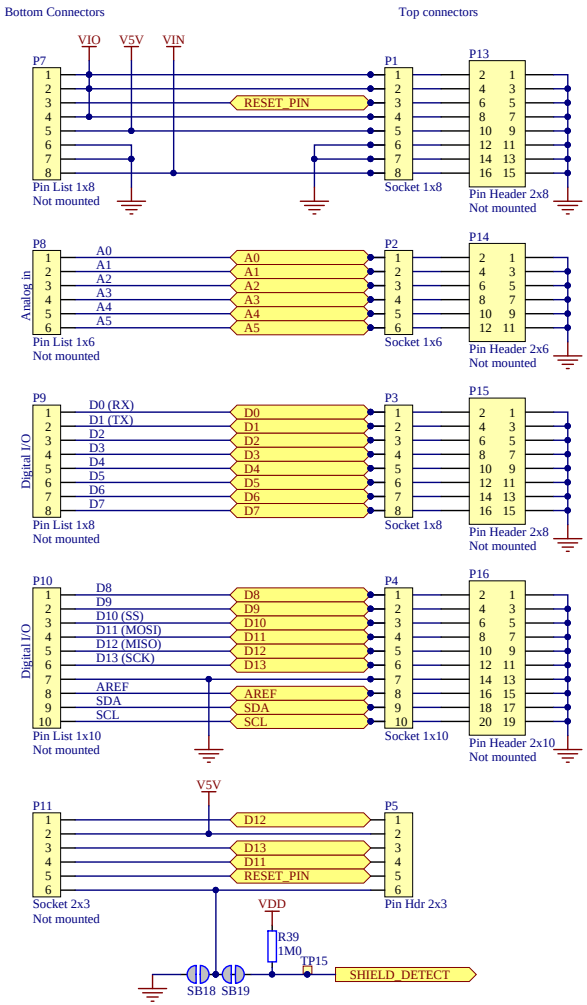

Auxiliary Connectors

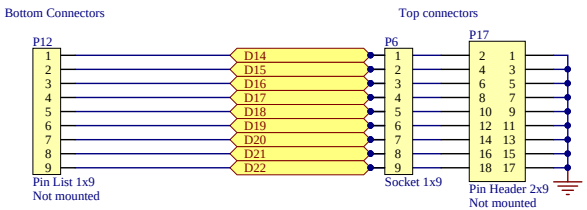

Interface MCU USB Connector

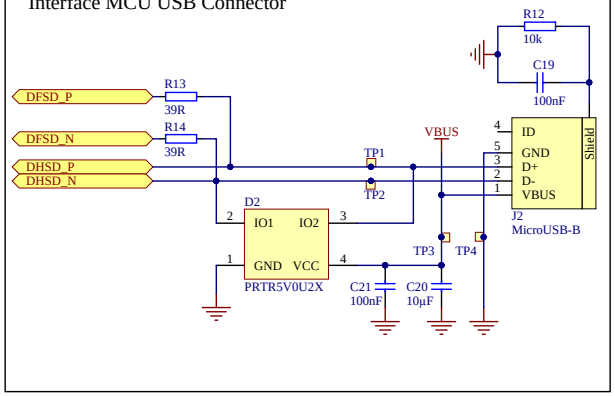

Interface MCU Programming Connector

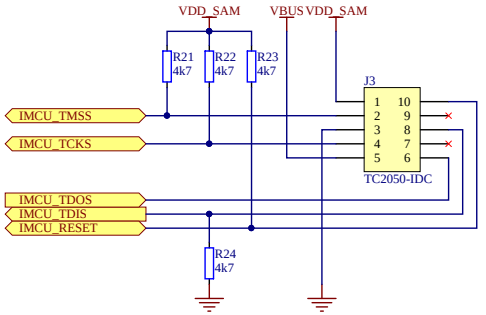

Debug OUT Connector

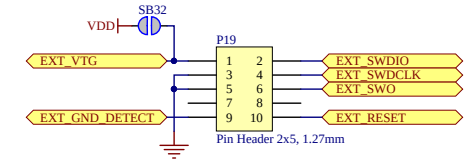

Shield Debug and Current measurement Connector

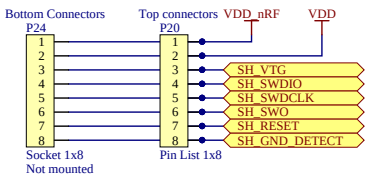

Debug IN Connector

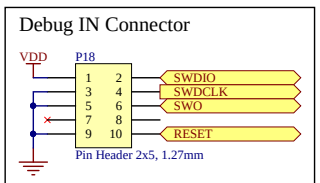

NFC pin configuration

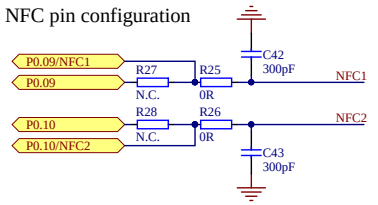

NFCT Antenna Connector

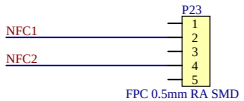

Connectors		
Size: A3	Project Number: 4397	Revision: 2.0.0
Date: 05.03.2019		Sheet 6 of 7
File: sheet6_connectors.SchDoc		Drawn By: KJP/RUBR/GETR

NORDIC SEMICONDUCTOR

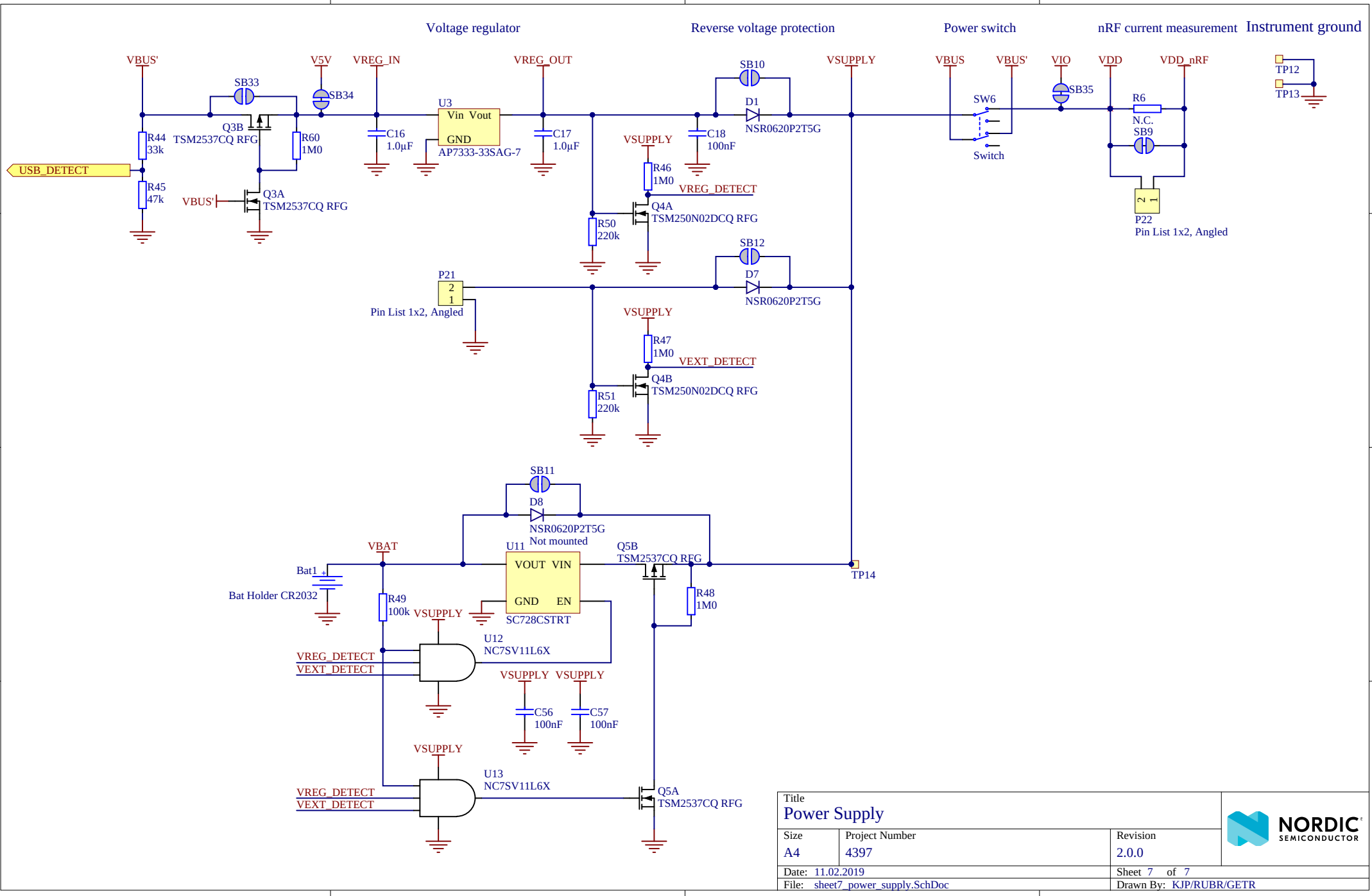

Title: Power Supply		
Size: A4	Project Number: 4397	Revision: 2.0.0
Date: 11.02.2019		Sheet 7 of 7
File: sheet7_power_supply.SchDoc		Drawn By: KJP/RUBR/GETR

NORDIC SEMICONDUCTOR

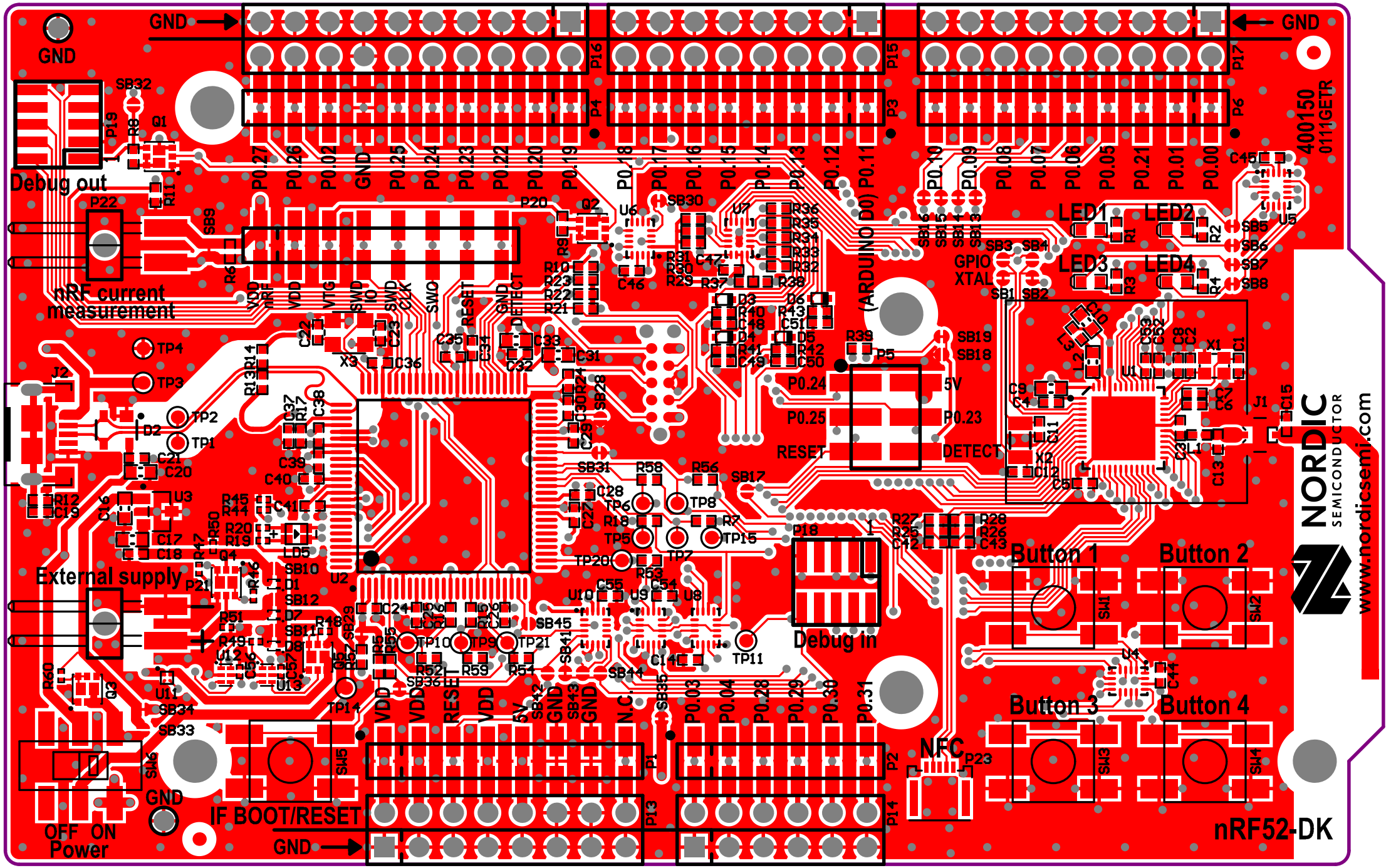
GND
Debug out
nRF current measurement
External supply
OFF ON Power
IF BOOT/RESET
Debug in
NFC
(ARDUINO D0) P0.11
GPIO XTAL
LED1
LED2
LED3
LED4
Button 1
Button 2
Button 3
Button 4
5V
RESET
DETECT
nRF52-DK
NORDIC SEMICONDUCTOR
www.nordicsemi.com
400150 0111GETR

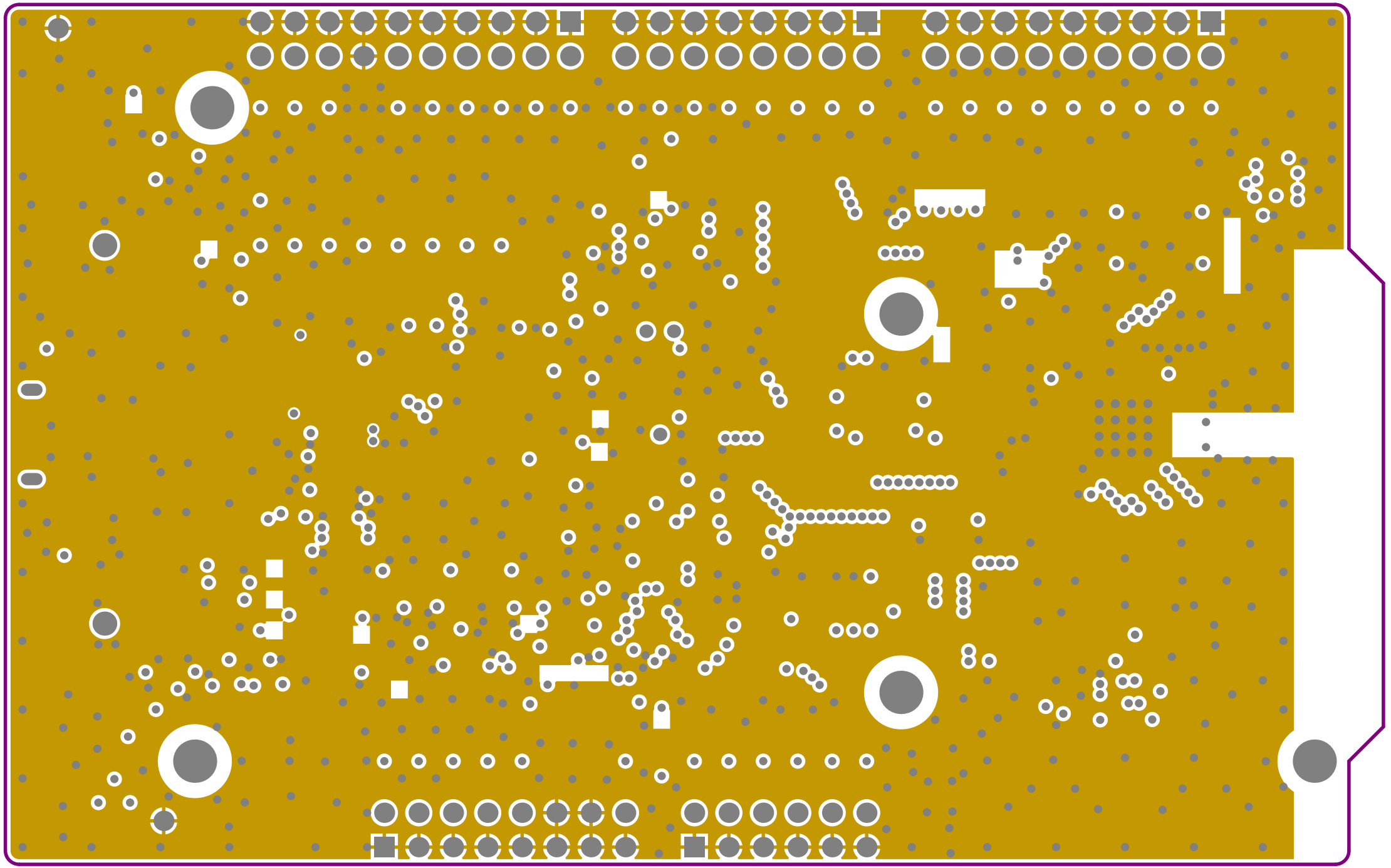

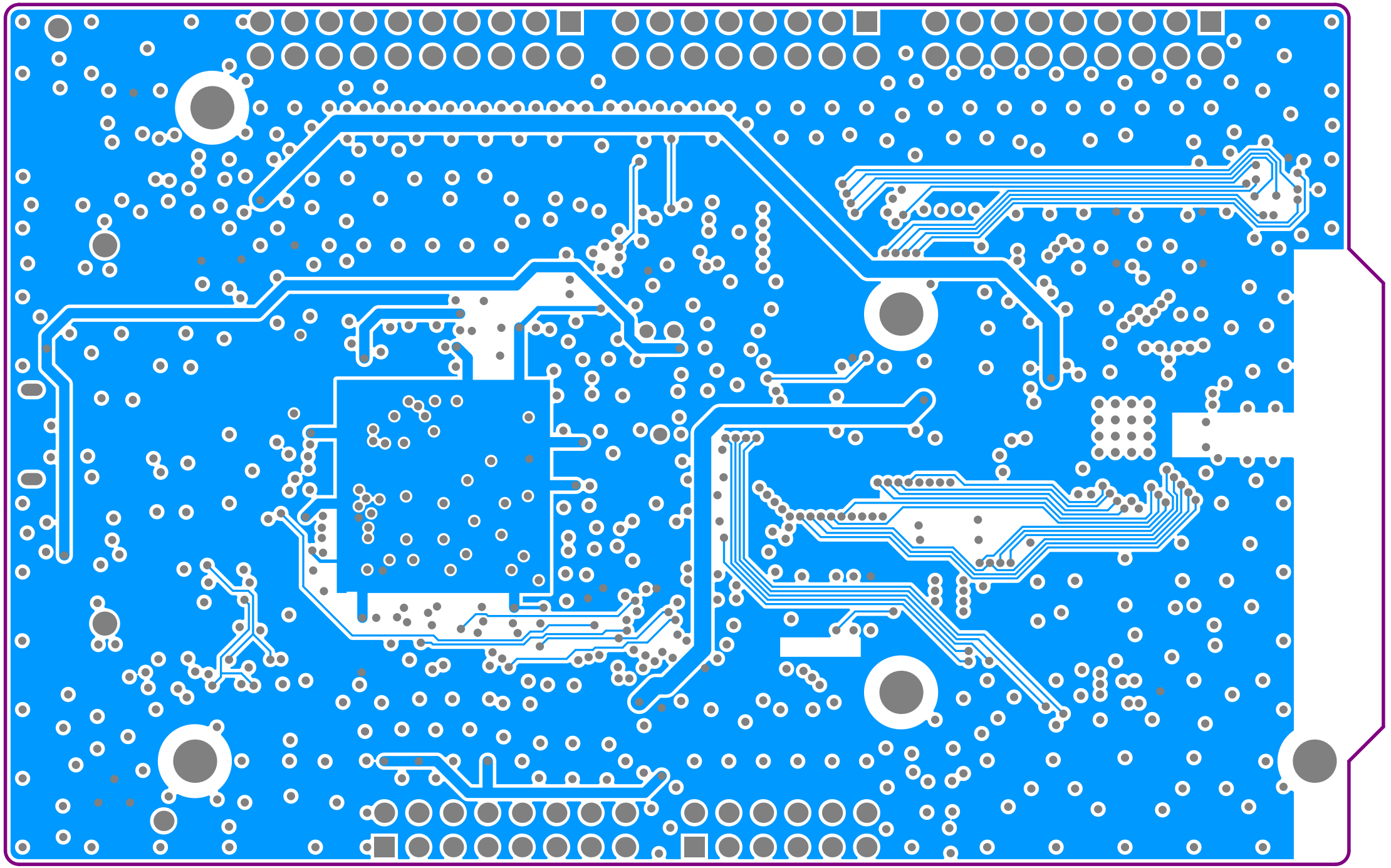

ARM
mbed
powered
www.seeedstudio.com
mbed NXP LPC1768
GPIO
Function
Short
HW
P0.0
P0.1
P0.4
P0.5
P0.7
P0.8
P0.9
P0.10
P0.11
P0.15
P0.16
P0.17
P0.18
P0.23
P0.24
P0.25
P0.26
P1.30
P1.31
P2.0
P2.1
P2.2
P2.3
P2.4
P2.5
P2.6
P2.7
P2.8
P2.9
P2.10
P2.11
P2.12
P2.13
P0.27 (SDA)
P0.28 (SCL)
P0.29 (USB D+)
P0.30 (USB D-)
P0.19
P0.20
P0.21
P0.22
P0.6
P0.12
P0.13
P0.14
P1.0
P1.1
P1.4
P1.8
P1.9
P1.10
P1.14
P1.15
P1.16
P1.17
P1.18
P1.19
P1.20
P1.21
P1.22
P1.23
P1.24
P1.25
P1.26
P1.27
P1.28
P1.29
P0.31
P2.31
P2.30
P2.29
P2.28
P2.27
P2.26
P2.25
P2.24
P2.23
P2.22
P2.21
P2.20
P2.19
P2.18
P2.17
P2.16
P2.15
P2.14
P0.3 (AIN2)
P0.2 (AIN1)
P0.1
P0.0

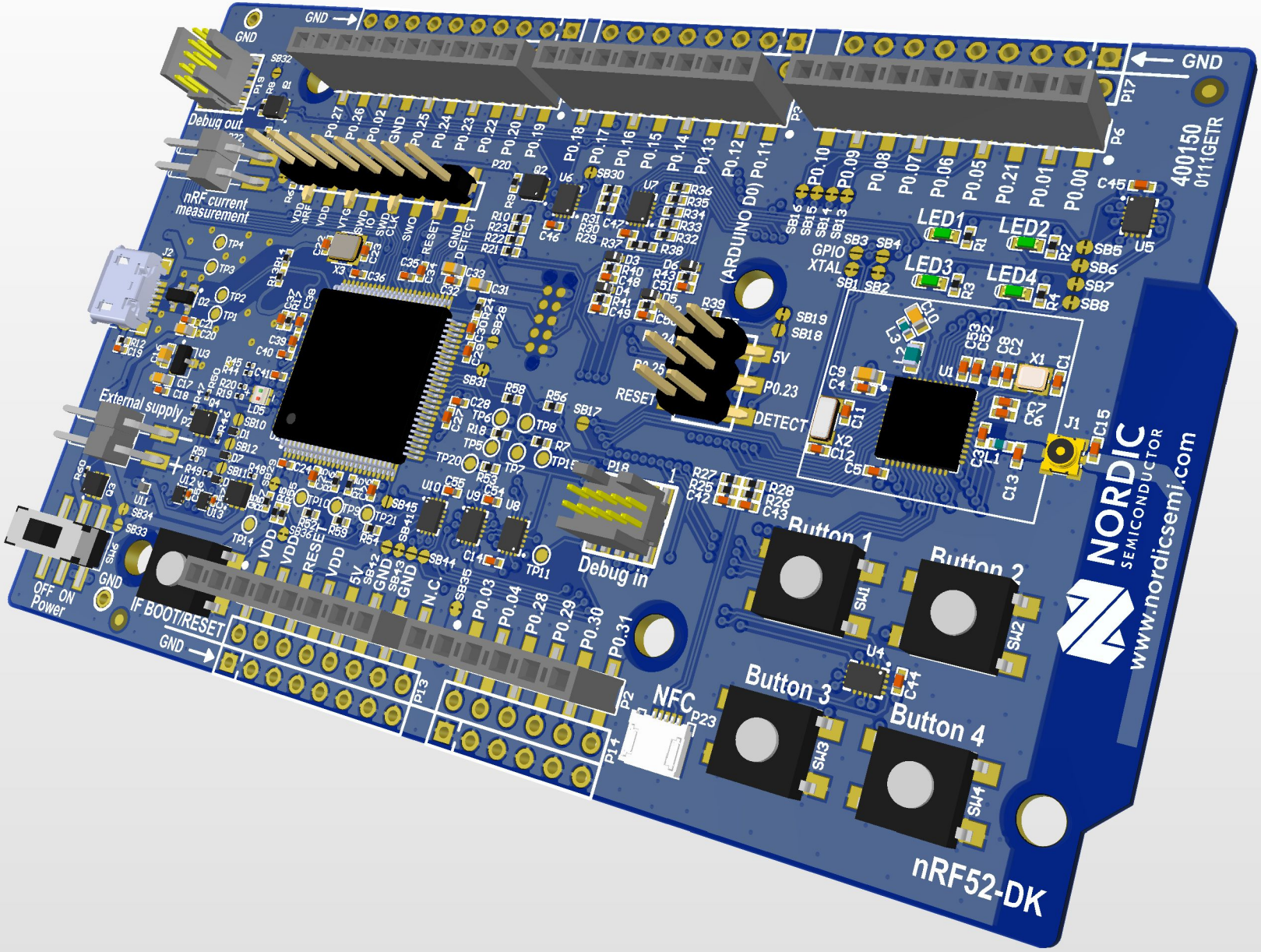

GND
Debug out
nRF current measurement
External supply
OFF ON Power
IF BOOT/RESET
Debug in
NFC
Button 1
Button 2
Button 3
Button 4
LED1
LED2
LED3
LED4
GPIO XTAL
(ARDUINO D0)
RESET
DETECT
5V
400150
0111GETR
NORDIC SEMICONDUCTOR
www.nordicsemi.com
nRF52-DK