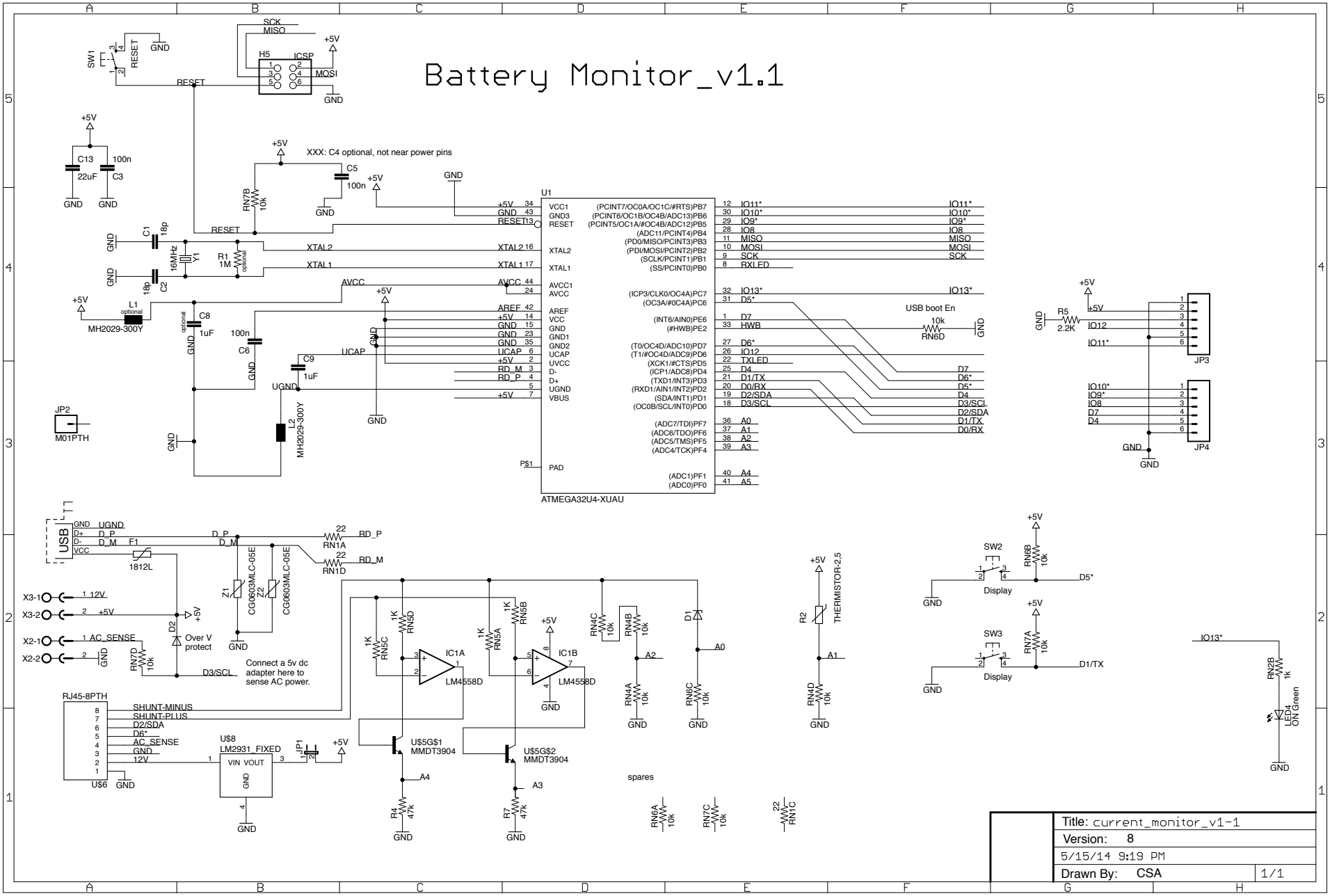

6/20/14 3:42 PM f=0.65 /Users/gjh/Documents/eagle/current_monitor/current_monitor_v1-1.sch (Sheet: 1/1)