Fullqubit alchemist:

Quantum algorithm for alchemical free energy calculations

Po-Wei Huang[1,2], Gregory Boyd[1], Gian-Luca R. Anselmetti[3], Matthias Degroote[3], Nikolaj Moll[3], Raffle Santagati[3], Michael Streif[3], Benjamin Ries[3], Daniel Marti-Dafcik[1,2], Hamza Jnane[1,2], Sophia Simon[4], Nathan Wiebe[4,5,6], Thomas R. Bromley[2], Bálint Koczor[1,2]

[1]University of Oxford, [2]Quantum Motion, [3]Boehringer Ingelheim, [4]University of Toronto, [5]PNNL, [6]CIFAR

University of Oxford

Quantum Motion

Drug design

Motivation and applications

- Working in a complex and warm environment, so need to calculate thermodynamic properties like free energies.
- We care more about differences in free energies between different candidate ligands.
- Need to evaluate molecular dynamics to evolve each configuration in our ensemble to equilibrium.

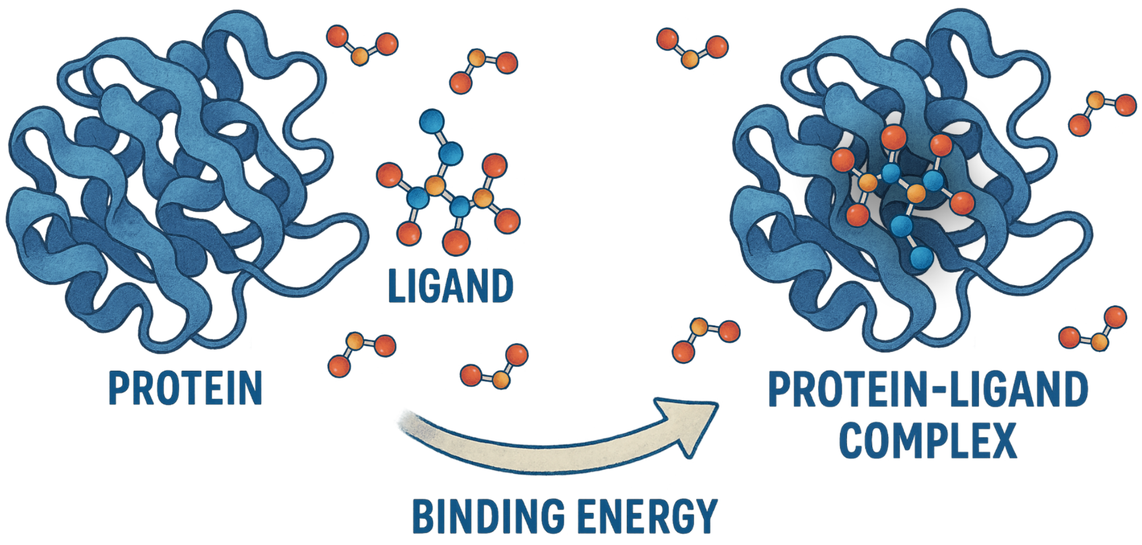

Molecular dynamics

In practice for classical computations

- Propagate particles with Hamiltonian dynamics
- Time average of evolution trajectory to replace ensemble average
  - Lots and lots of compute time!
- Used to compute thermal averages such as free energy

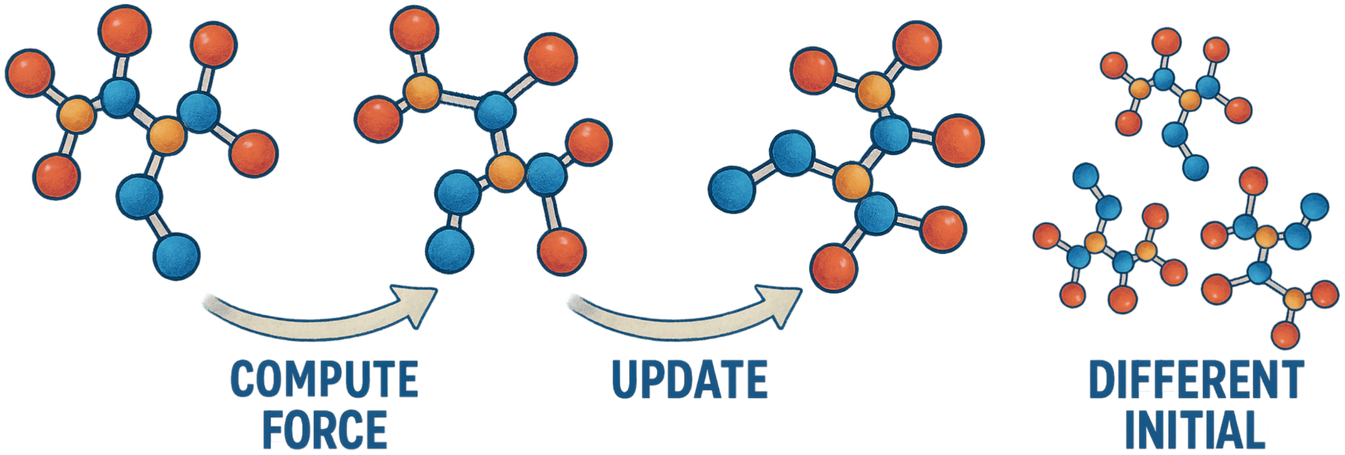

Molecular dynamics

Under the Liouvillian picture

- Liouvillian dynamics with fixed volume and temperature
- Born Oppenheimer approximation – classical nuclei and quantum electrons
- Generate discretized phase space on logarithmic number of qubits
- Electronic dynamics determined by ground state energy calculations

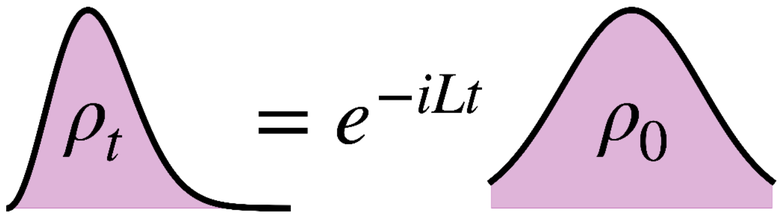

$$L = -i\left(\frac{\partial H}{\partial \boldsymbol{p}}\frac{\partial}{\partial \boldsymbol{x}} - \frac{\partial H}{\partial \boldsymbol{x}}\frac{\partial}{\partial \boldsymbol{p}}\right)$$

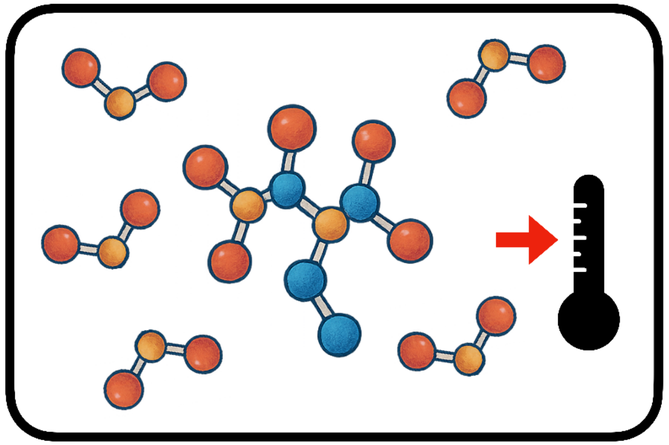

Molecular dynamics on a quantum computer

Or, Liouvillian block-encodings and Liouvillian simulation

- Block-encode Liouvillian operator
- Obtain quantum mechanical electronic forces via kicking back results from electronic register.
- Compute electronic forces via Hellmann-Feynman theorem and first-quantized Hamiltonian.

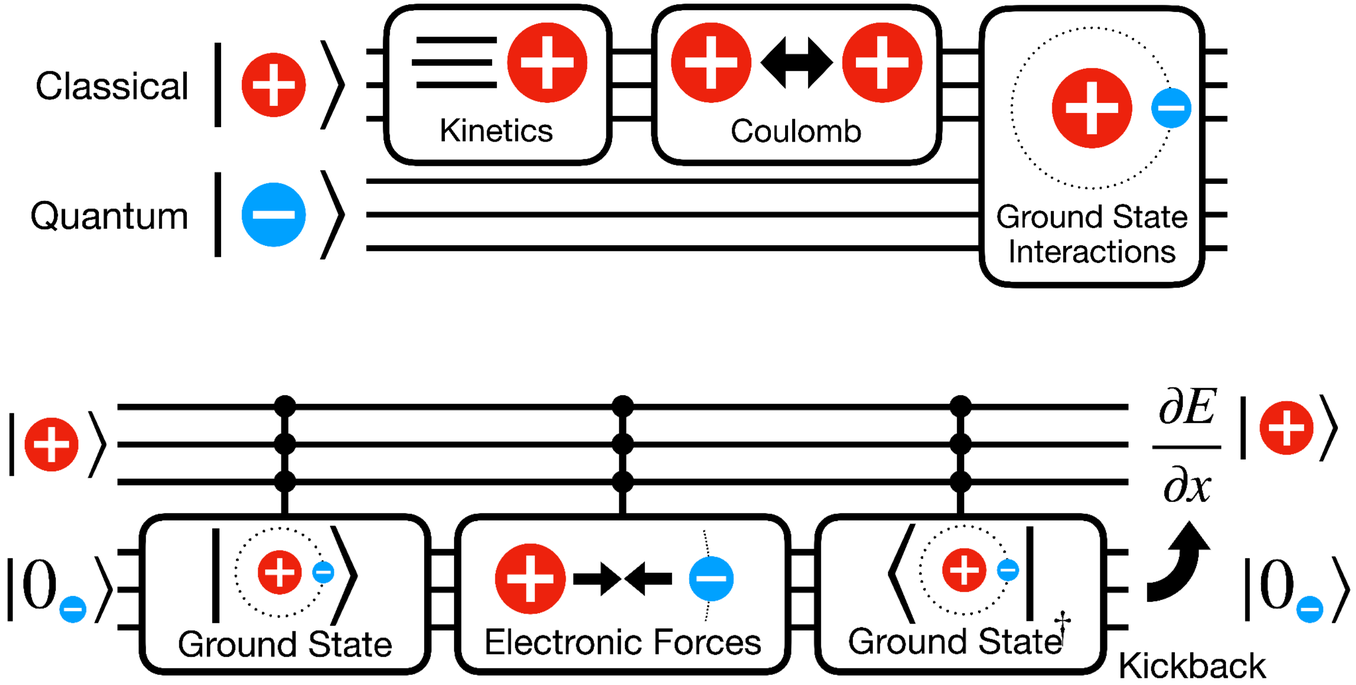

Calculating free-energy differences

Thermodynamic integration on a quantum computer

- Free energy differences can be expressed as an integral that interpolates the molecular dynamics between initial and final configurations.
- Sum over interpolated Liouvillian simulation prepared states over nuclear Hamiltonian

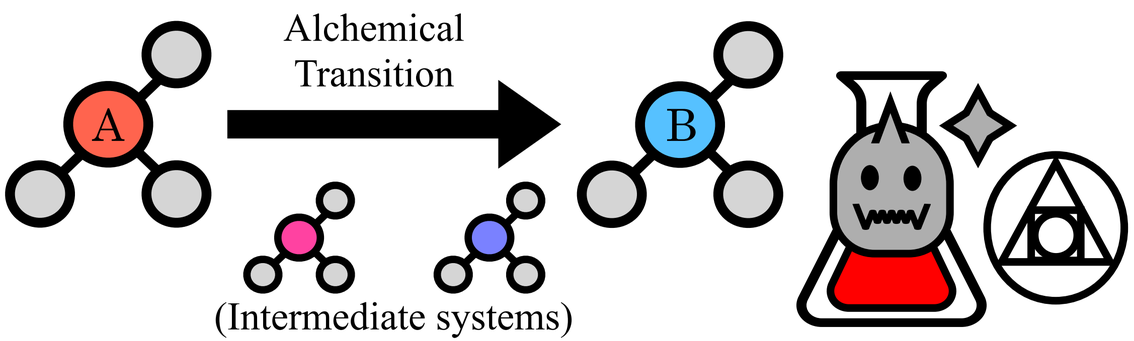

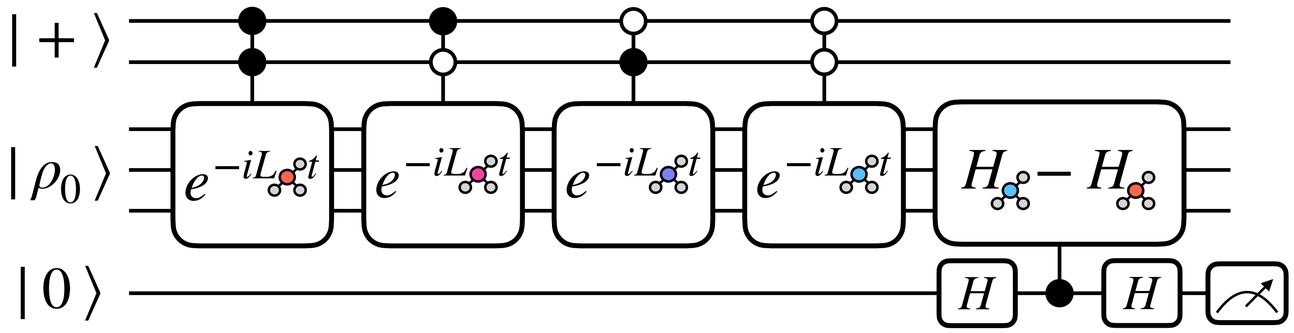

Controlled Liouvillian simulations

How the algorithm doesn't scale linear to the interpolation points

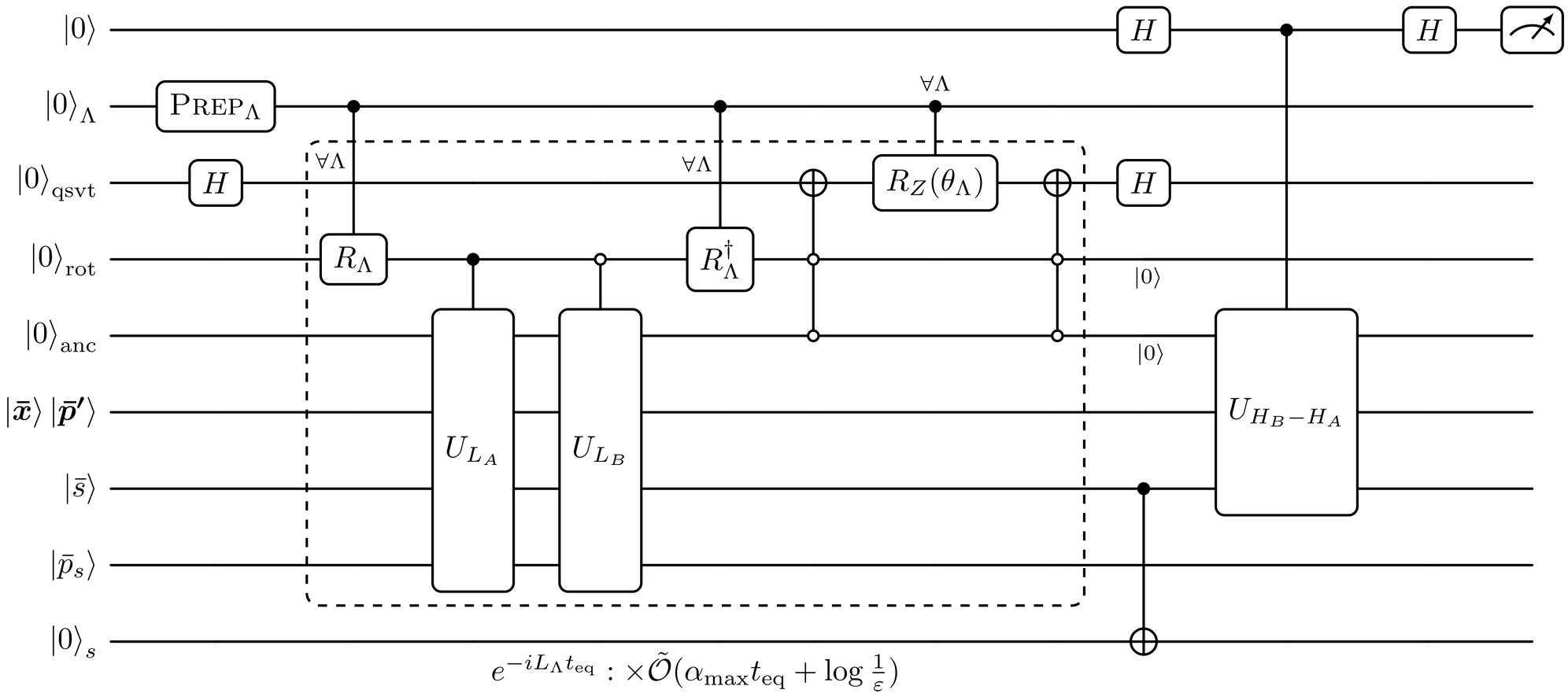

Algorithm breakdown

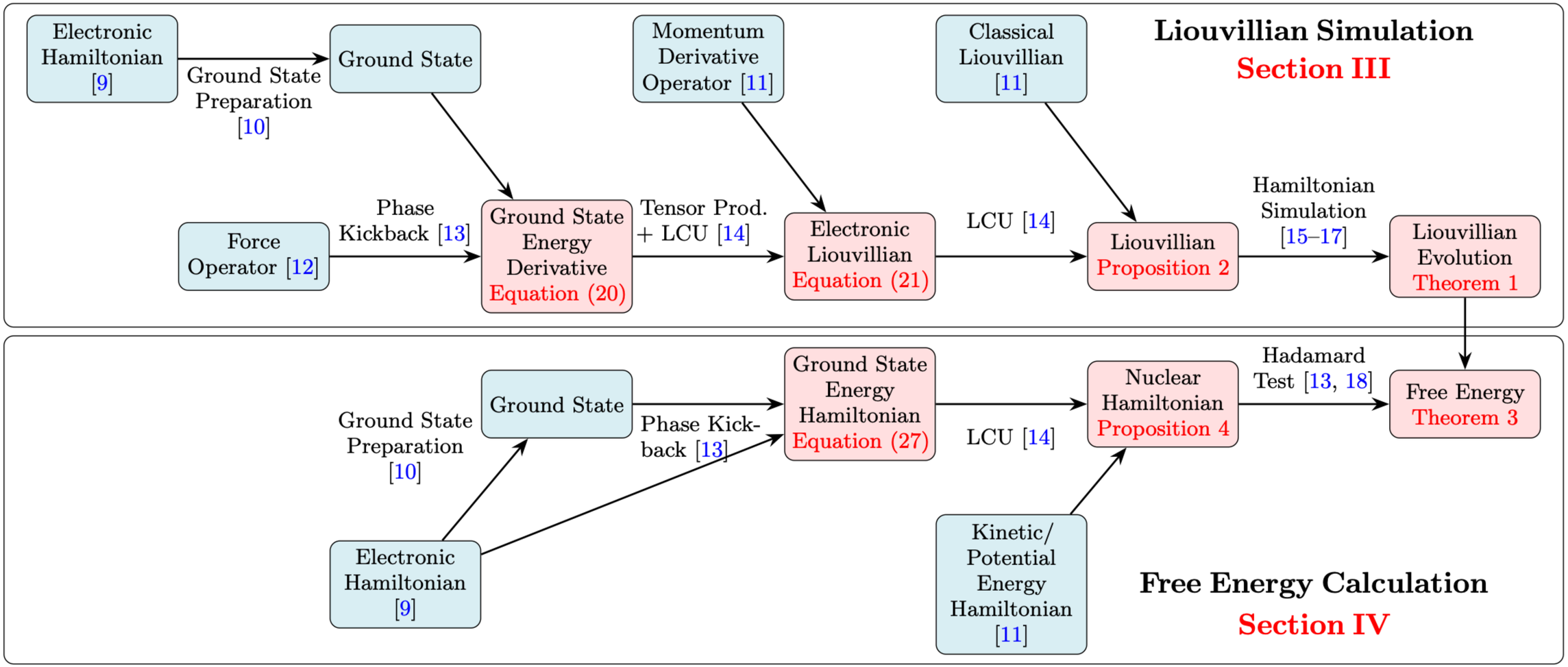

A glimpse into the size of the algorithm

Or, why there are no numerical simulations

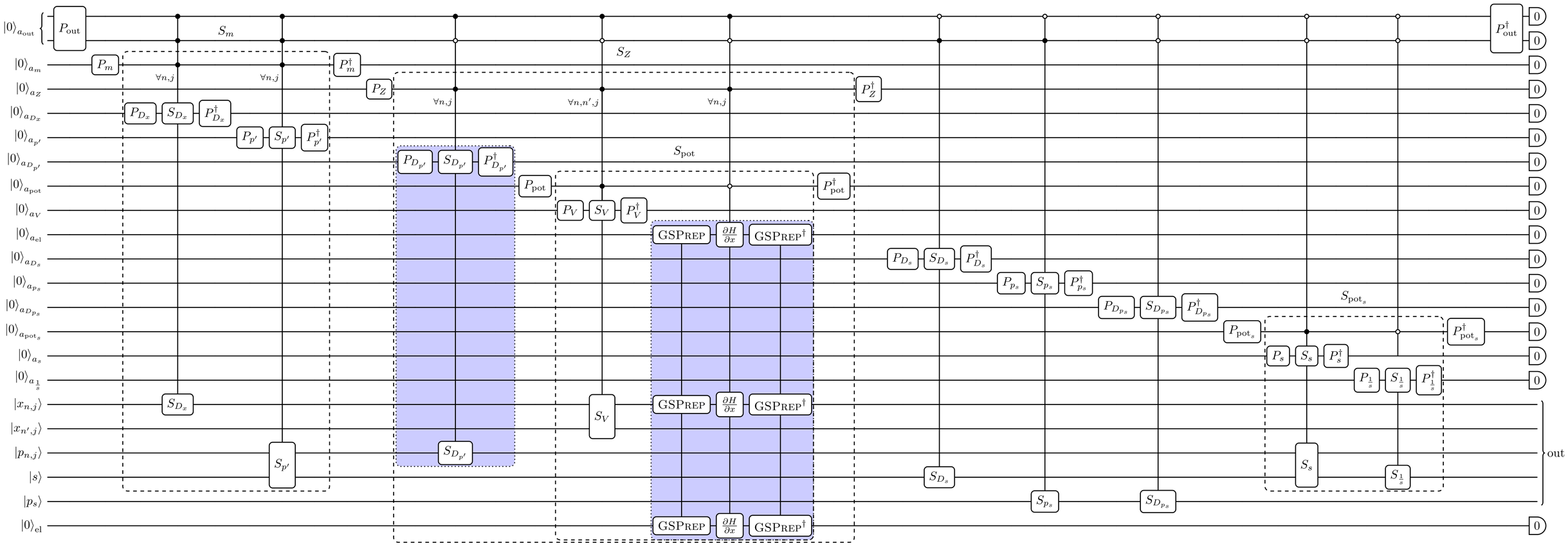

Performance comparison

With other quantum algorithms and advantages over classical

- Exponential improvements in precision over iterating between MD time step and electronic structure calculations (with both classical and quantum computing methods)
- Superpolynomial improvements over previous Trotterized Liouvillian approach
- Bypass entropy estimation via relative free energy calculations (no sampling over exponential phase-space)

	MD simulation	Free energy calculation
QPE + Euler Int. [1]	$\tilde{\mathcal{O}}(\varepsilon^{-1})$	—
Liouville + Trott. [2]	$\tilde{\mathcal{O}}(\varepsilon^{-o(1)})$	$\tilde{\mathcal{O}}(\eta^{1+o(1)}\varepsilon^{-1.5} + \varepsilon^{-2})$
Our work	$\mathcal{O}(\log^3 \varepsilon^{-1})$	$\tilde{\mathcal{O}}(\varepsilon^{-1})$