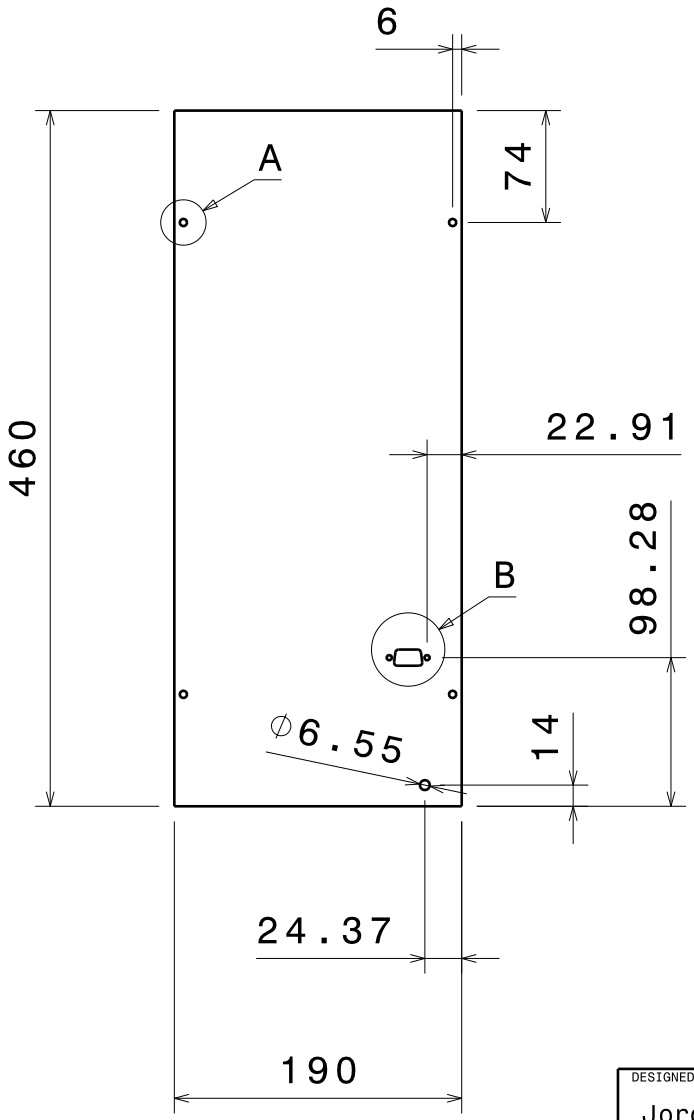

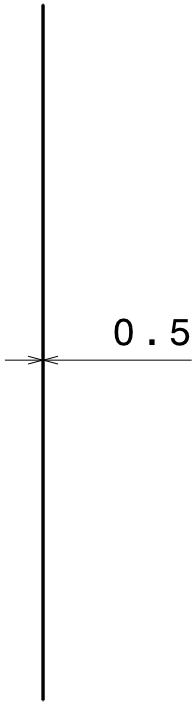

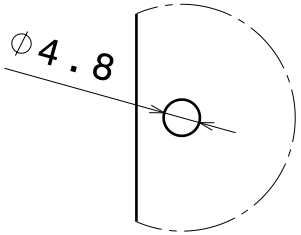

Detail A
Scale: 1:1

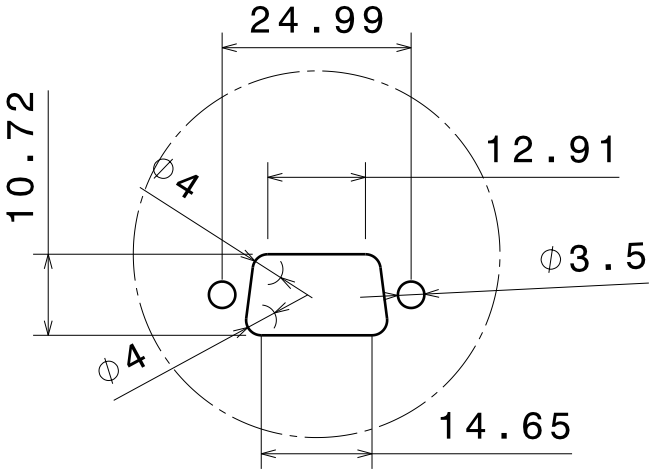

Detail B
Scale: 1:1

DESIGNED BY: Jordi Coll Ortega	TEAM: TUBULAR - BEXUS 26		
DATE: 13/05/2018	UNIVERSITY: LULEA UNIVERSITY OF TECHNOLOGY		
CHECKED BY: Pau Molas Roca	PART ID: M15.8	PART NAME: Interfaces wall - CAC	
DATE: 14/05/2018	MATERIAL: ALUMINUM 5754		AMOUNT: 1
SIZE A4	SCALE 1:5	VERSION: CRITICAL DESIGN REVIEW - SEDv2.0	