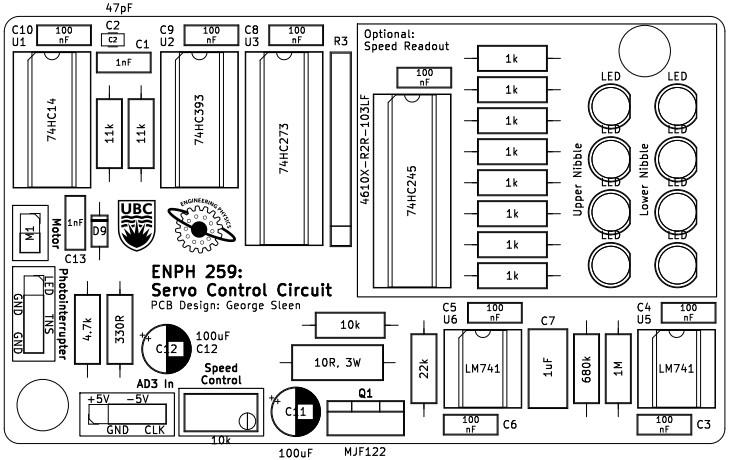

George Sleen

Sheet:

File: enph259-servo.kicad_pcb

Title: ENPH-259-Servo

Size: A5	Date: 2024-12-27	**Rev: 1**
KiCad E.D.A. 9.0.0		Id: 1/1