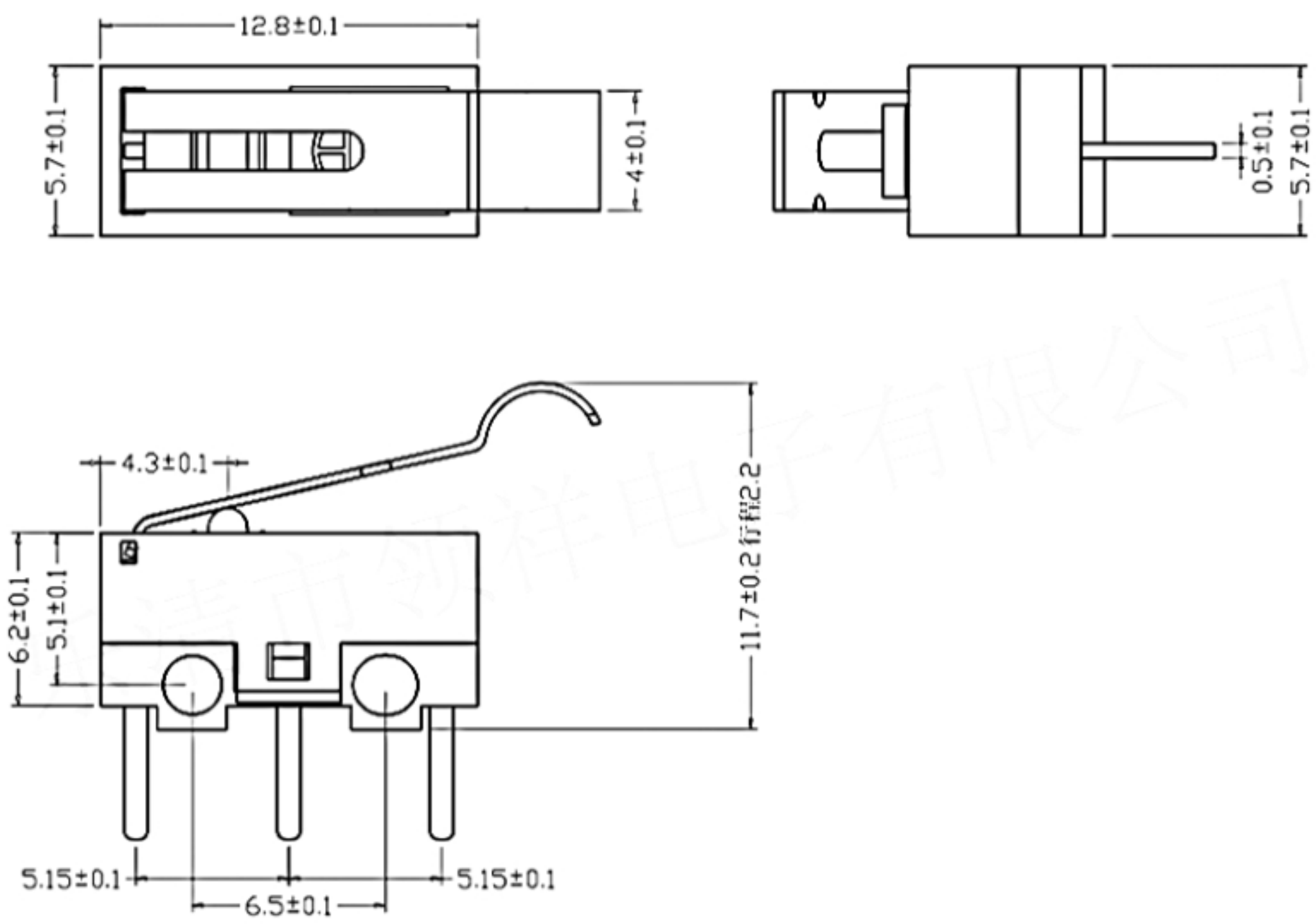
12.8±0.1
5.7±0.1
4±0.1
0.5±0.1
5.7±0.1
4.3±0.1
6.2±0.1
5.1±0.1
11.7±0.2行程2.2
5.15±0.1
6.5±0.1
5.15±0.1

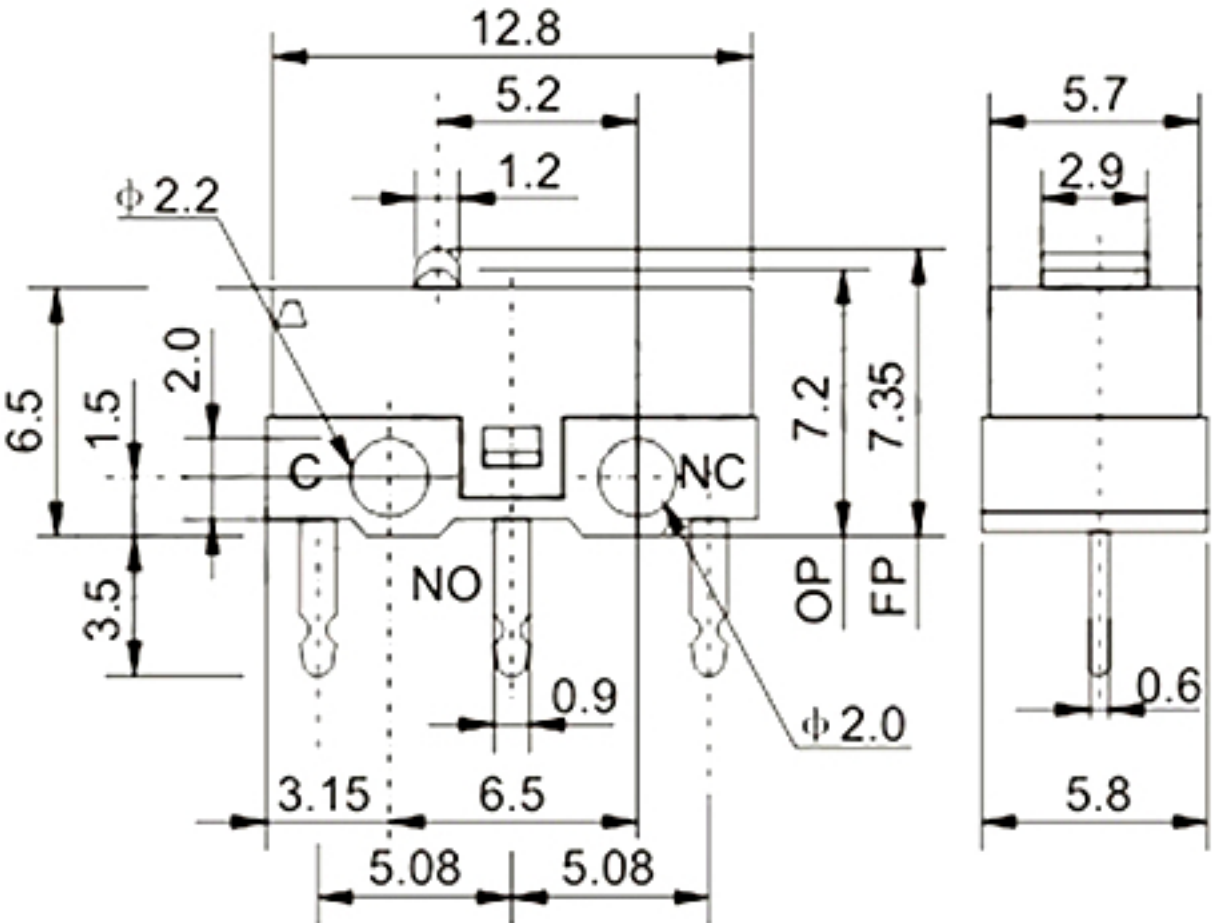
12.8
5.2
1.2
ϕ2.2
5.7
2.9
6.5
1.5
2.0
3.5
C
NC
NO
7.2
7.35
OP
FP
0.9
ϕ2.0
0.6
3.15
6.5
5.08
5.08
5.8

SCHEMATIC

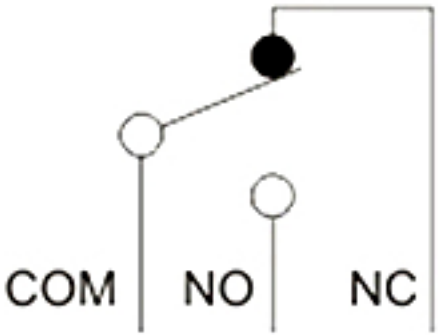
COM
NO
NC