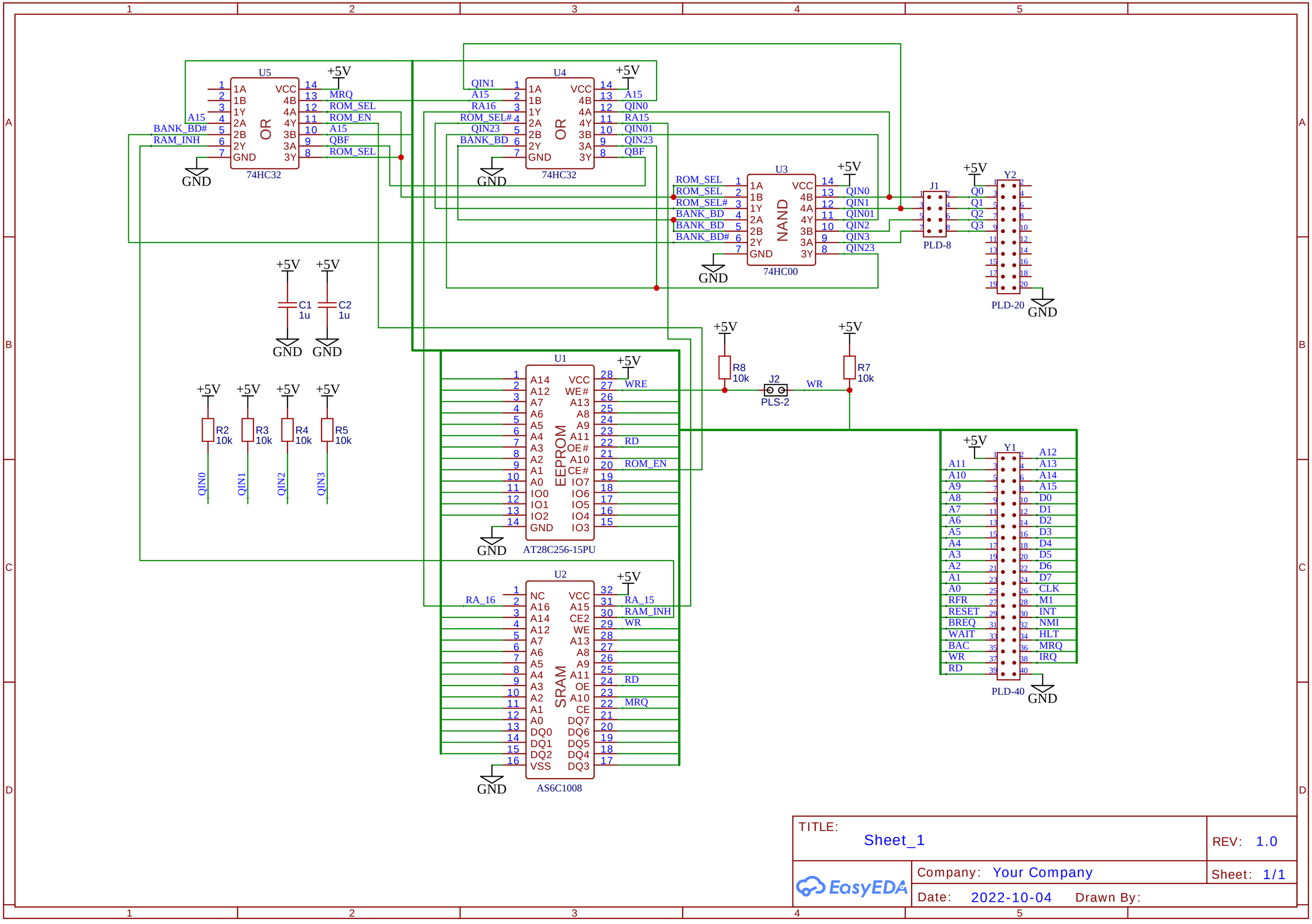
U5
74HC32
U4
74HC32
U3
74HC00
U1
AT28C256-15PU
U2
AS6C1008
J1
PLD-8
Y2
PLD-20
Y1
PLD-40
J2
PLS-2
C1 1u
C2 1u
R2 10k
R3 10k
R4 10k
R5 10k
R7 10k
R8 10k
+5V
GND
MRQ
ROM_SEL
ROM_EN
A15
QBF
BANK_BD#
RAM_INH
QIN1
RA16
ROM_SEL#
QIN23
BANK_BD
QIN0
RA15
QIN01
QIN2
QIN3
Q0
Q1
Q2
Q3
WRE
RD
WR
RA_16
RA_15
RAM_INH
CLK
M1
INT
NMI
HLT
IRQ
TITLE:
Sheet_1
REV: 1.0
Company: Your Company
Sheet: 1/1
Date: 2022-10-04
Drawn By:
EasyEDA