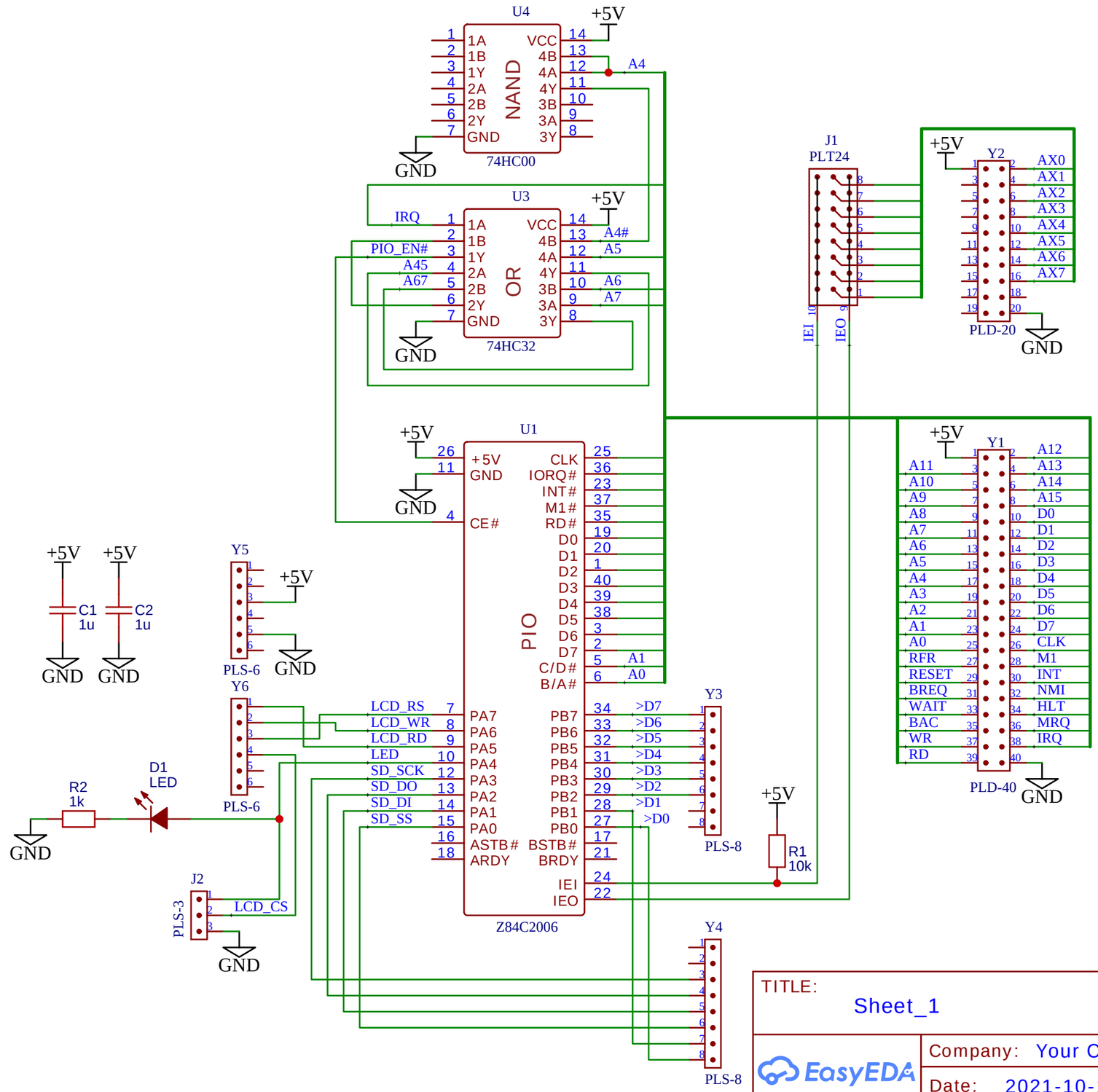

TITLE: Sheet_1

REV: 1.0

Company: Your Company

Sheet: 1/1

Date: 2021-10-14

Drawn By: