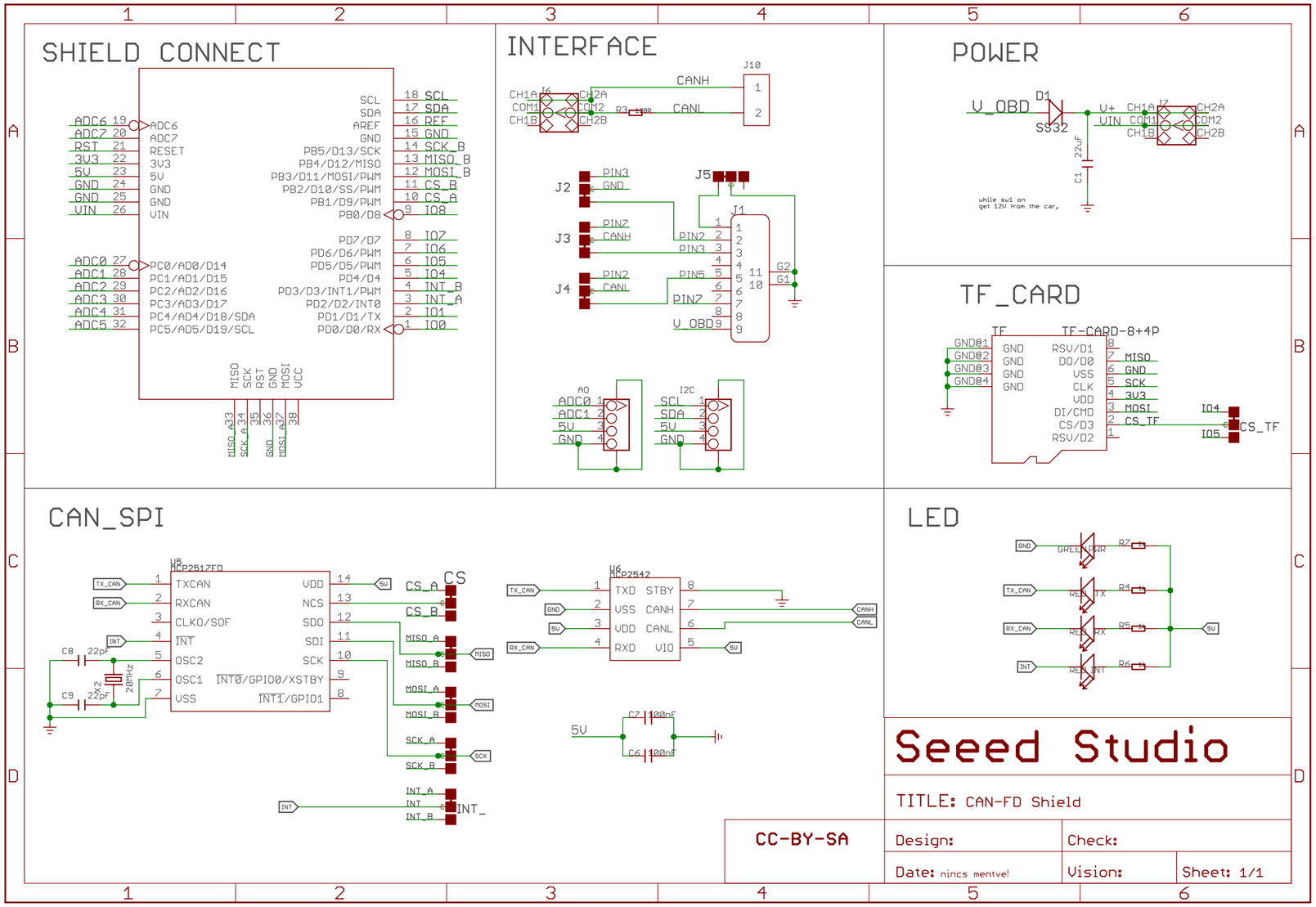

Interrupt upon CAN receive data

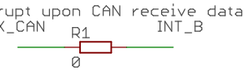

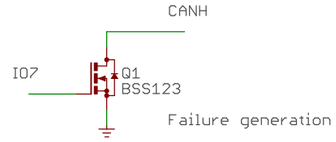

Failure generation