Simulating Queues with Ciw

Geraint Ian Palmer

PyCon Namibia 2016

What is a Queue?

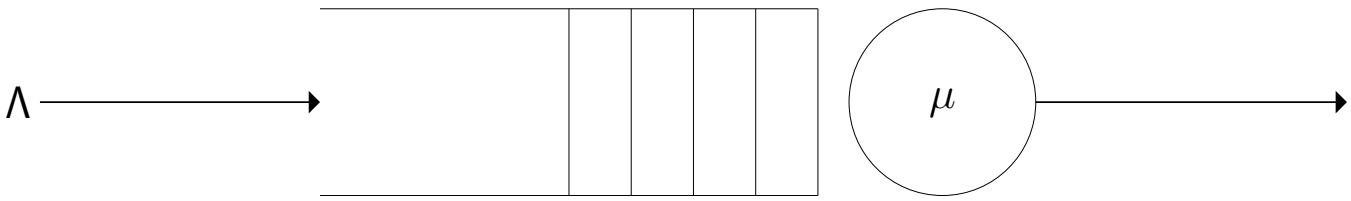

GAME
GAME
GAME

What is a Queue?

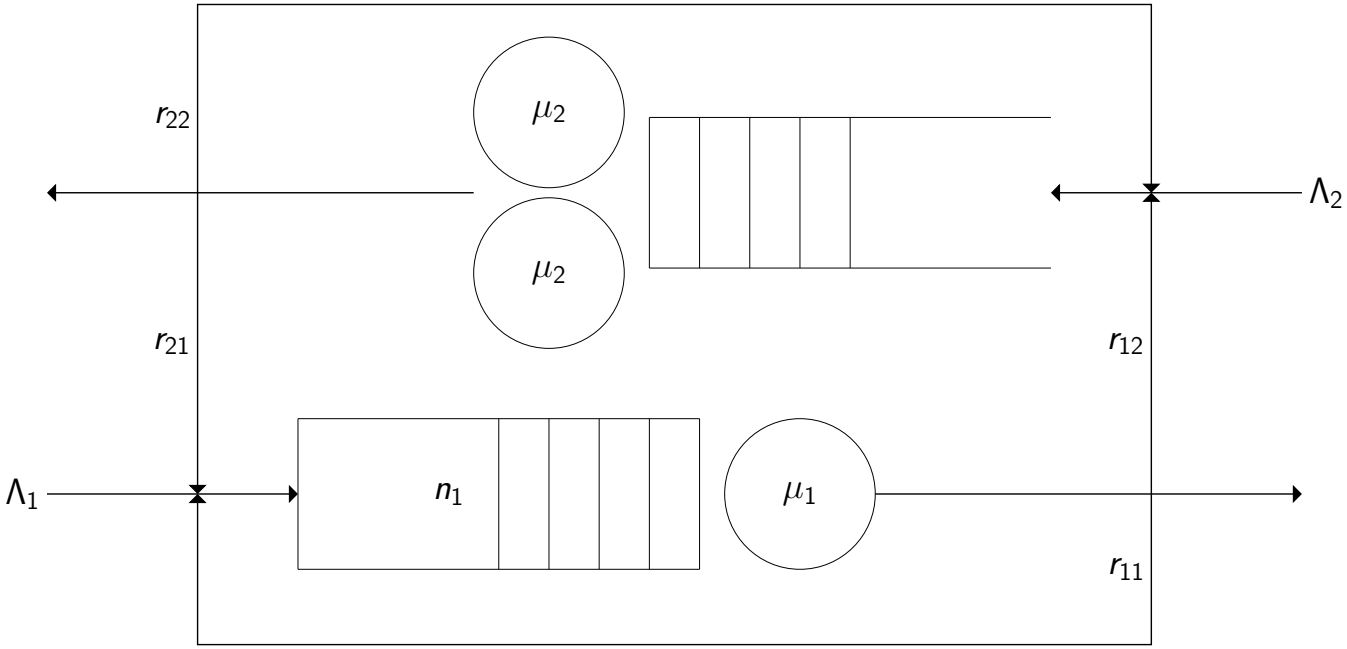

```
.
├── ciw
│   ├── __init__.py
│   ├── arrival_node.py
│   ├── data_record.py
│   ├── exit_node.py
│   ├── import_params.py
│   ├── individual.py
│   ├── node.py
│   ├── server.py
│   ├── simulation.py
│   └── tests
│       ├── __init__.py
│       ├── datafortesting
│       │   └── ...
│       └── ...
├── docs
│   ├── _static
│   │   ├── logo.pdf
│   │   ├── favicon.ico
│   │   └── logo.png
│   └── ...
├── scripts
│   └── run_simulation
├── requirements.txt
├── LICENSE.txt
├── MANIFEST.in
├── README.rst
└── setup.py
```

```
.
├── ciw
│   ├── __init__.py
│   ├── arrival_node.py
│   ├── data_record.py
│   ├── exit_node.py
│   ├── import_params.py
│   ├── individual.py
│   ├── node.py
│   ├── server.py
│   ├── simulation.py
│   └── tests
│       ├── __init__.py
│       ├── datafortesting
│       │   └── ...
│       └── ...
├── docs
│   ├── _static
│   │   ├── logo.pdf
│   │   ├── favicon.ico
│   │   └── logo.png
│   └── ...
├── scripts
│   └── run_simulation
├── requirements.txt
├── LICENSE.txt
├── MANIFEST.in
├── README.rst
└── setup.py
```

Three-Phase Simulation Approach

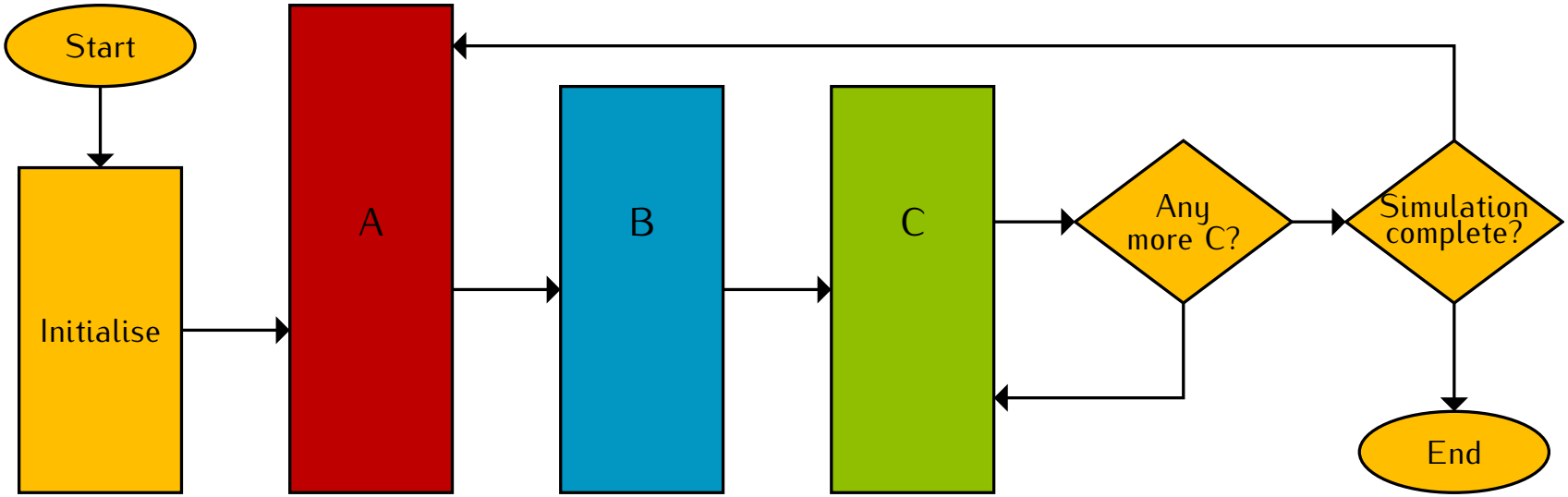

Event Types

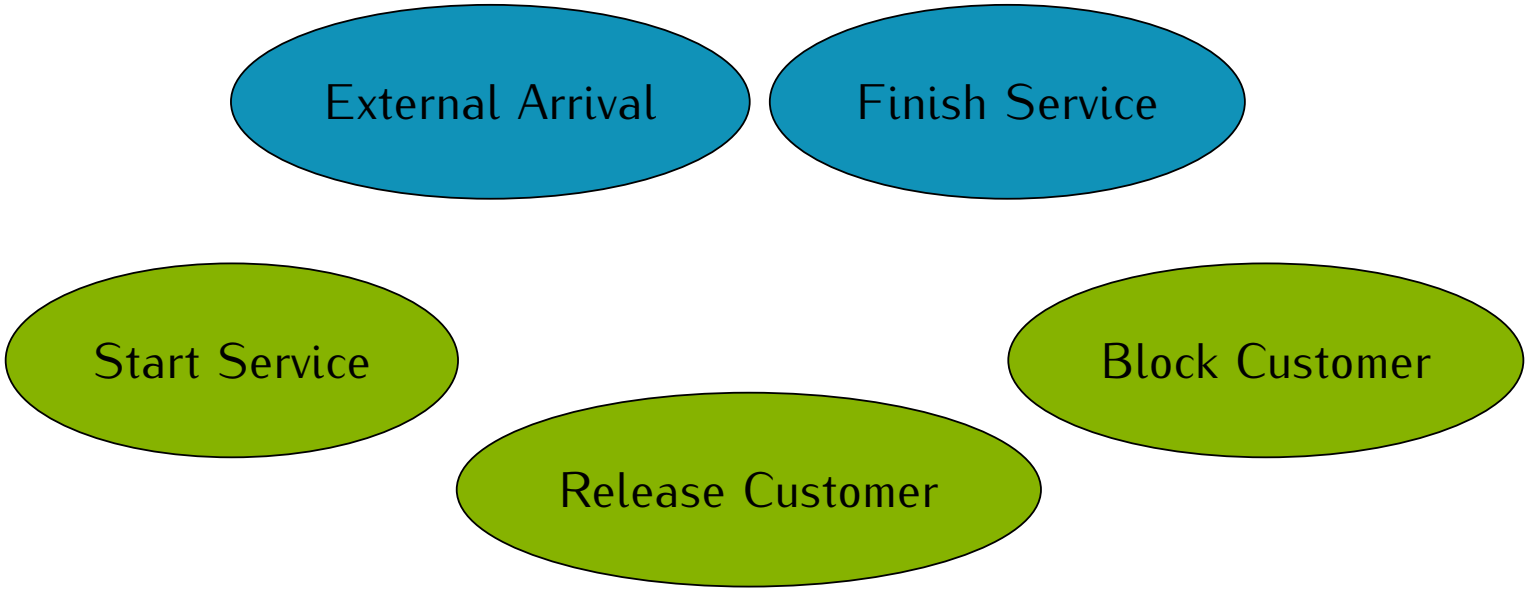
External Arrival
Finish Service
Start Service
Block Customer
Release Customer

Sampling from a Probability Distribution

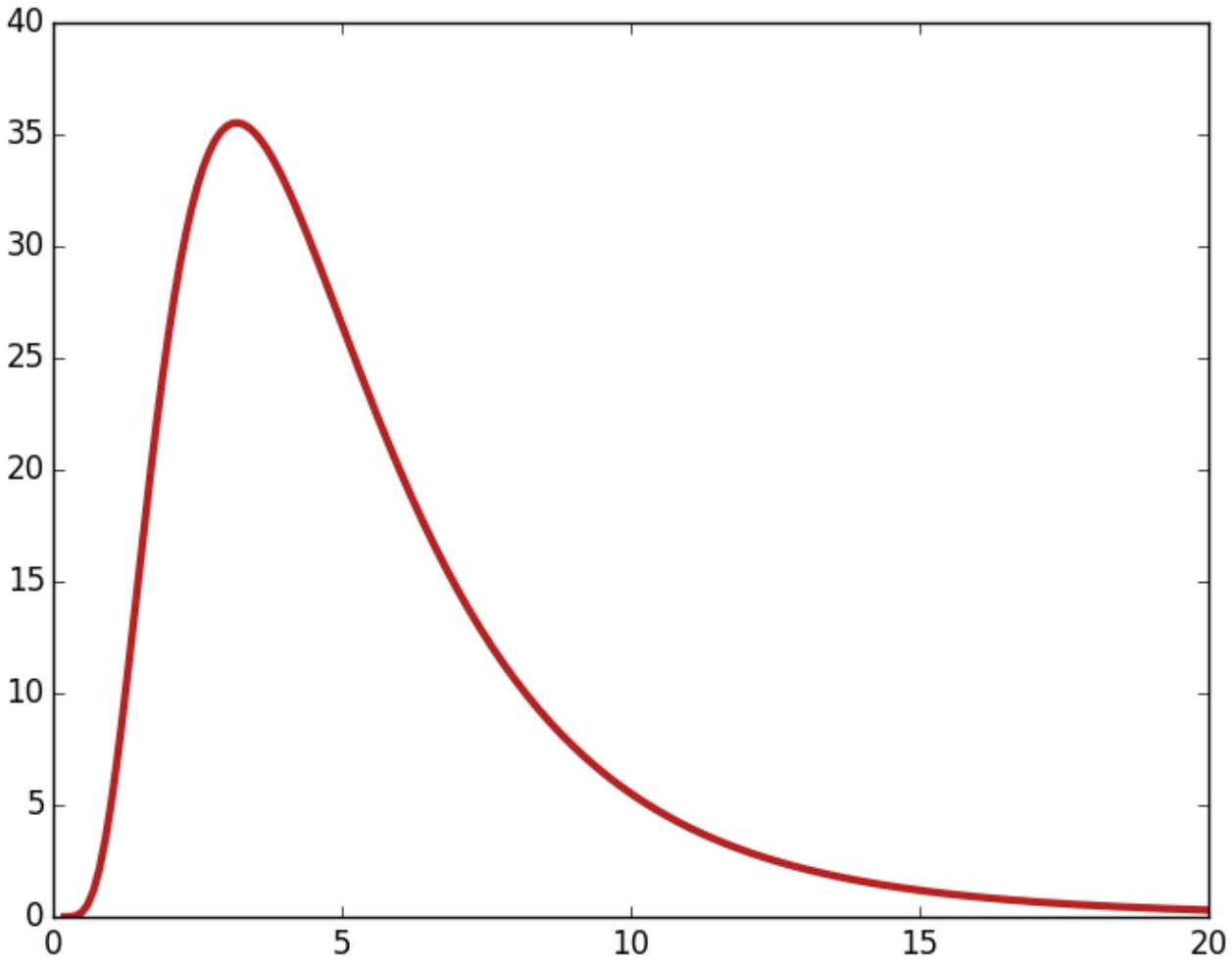

Code Structure

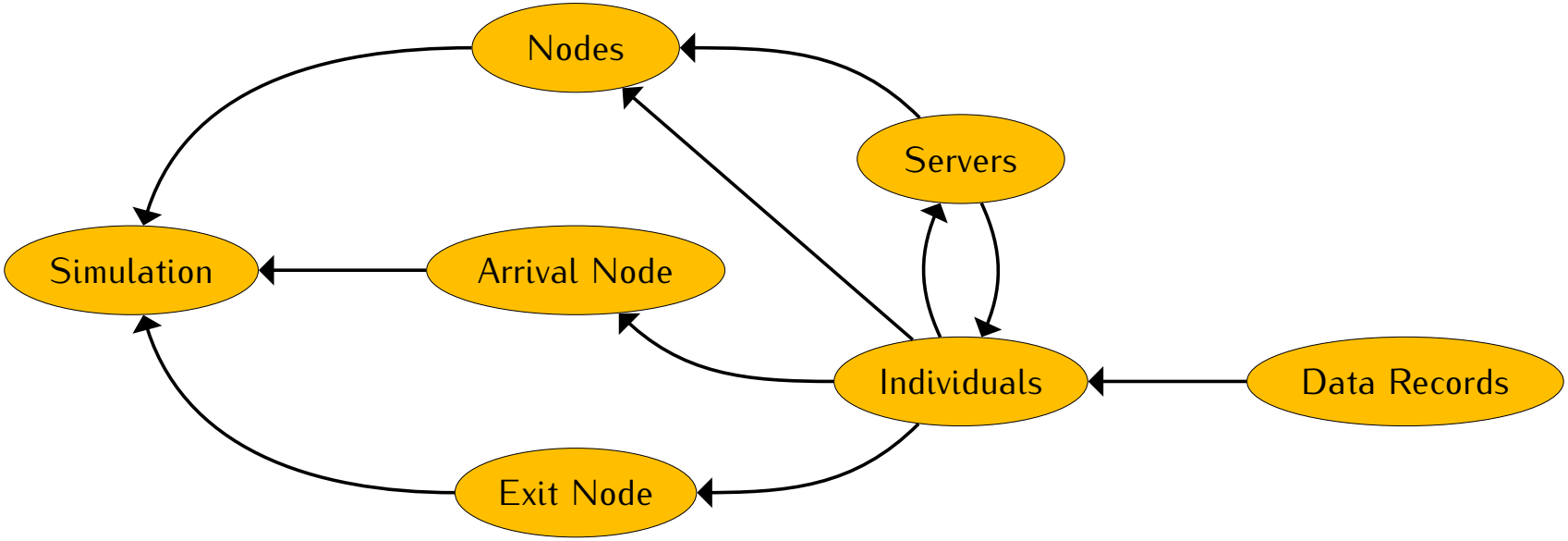

Pair Programing / Collaborative Work

Git & GitHub

GitHub Issues

9 Open ✓ 2 Closed Author Labels

Windows slash bug documentation
#13 opened 8 minutes ago by geraintpalmer

Documentation on library, not just command line tool documentation
#12 opened 8 minutes ago by geraintpalmer

Sort out script help wanted
#11 opened 9 minutes ago by geraintpalmer

Time dependent servers enhancement
#10 opened 9 minutes ago by geraintpalmer

Script to doc test the docs. tests
#9 opened 9 minutes ago by geraintpalmer

deadlock detection & server schedules not compatible bug
#8 opened 9 minutes ago by geraintpalmer

Include MM1 comparison in docs documentation
#7 opened 9 minutes ago by geraintpalmer

A fancy logo documentation enhancement
#5 opened 9 minutes ago by geraintpalmer

Set up travis for continuous integration. tests
#3 opened 10 minutes ago by geraintpalmer

```
.
├── ciw
│   ├── __init__.py
│   ├── arrival_node.py
│   ├── data_record.py
│   ├── exit_node.py
│   ├── import_params.py
│   ├── individual.py
│   ├── node.py
│   ├── server.py
│   ├── simulation.py
│   └── tests
│       ├── __init__.py
│       ├── datafortesting
│       │   └── ...
│       └── ...
├── docs
│   ├── _static
│   │   ├── logo.pdf
│   │   ├── favicon.ico
│   │   └── logo.png
│   └── ...
├── scripts
│   └── run_simulation
├── requirements.txt
├── LICENSE.txt
├── MANIFEST.in
├── README.rst
└── setup.py
```

Doctests

```
def geraints_function(a, b):
    """
    Returns the absolute difference between a and b

        >>> geraints_function(7, 9)
        2
        >>> round(geraints_function(20.4, 3.1), 1)
        17.3
    """
    return max(b-a, a-b)
```

Unittests

```
import unittest
import geraints_function

class TestGeraintsFunction(unittest.TestCase):

    def test_geraints_function(self):
        self.assertEqual(geraints_function(7, 9), 2)
        self.assertEqual(geraints_function(20.4, 3.1), abs(20.4-3.1))
```

Travis

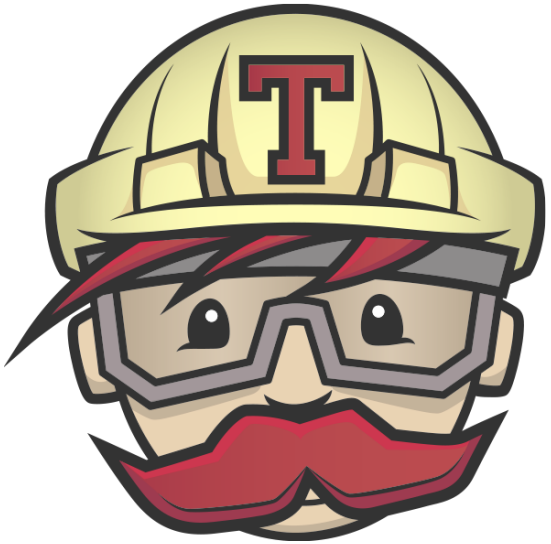

Coverage

```
$ pip install coverage
$ coverage run --source=ciw -m unittest discover ciw.tests
$ coverage report -m
```

Coverage

```
Name                        Stmts   Miss  Cover   Missing
-------------------------------------------------------
__init__                        8      0   100%
arrival_node                   40      2    95%   27, 55
data_record                    16      2    88%   12, 15
exit_node                      13      0   100%
import_params                  13      2    85%   21-22
individual                     16      0   100%
node                          202      7    97%   104, 111, 193, 220, 747, 751-752
server                         10      0   100%
simulation                    144     23    84%   50, 53, 56, 59, 62, 65, 68, 71, 86,
 96, 98, 100, 107, 182, 199-216
tests/__init__                  0      0   100%
tests/test_arrival_node        71      0   100%
tests/test_data_record         24      0   100%
tests/test_exit_node           39      0   100%
tests/test_individual          26      0   100%
tests/test_node                60      0   100%
tests/test_server              18      0   100%
tests/test_simulation          99      0   100%
-------------------------------------------------------
TOTAL                         799     36    95%
```

```
.
├── ciw
│   ├── __init__.py
│   ├── arrival_node.py
│   ├── data_record.py
│   ├── exit_node.py
│   ├── import_params.py
│   ├── individual.py
│   ├── node.py
│   ├── server.py
│   ├── simulation.py
│   └── tests
│       ├── __init__.py
│       ├── datafortesting
│       │   └── ...
│       └── ...
├── docs
│   ├── _static
│   │   ├── logo.pdf
│   │   ├── favicon.ico
│   │   └── logo.png
│   └── ...
├── scripts
│   └── run_simulation
├── requirements.txt
├── LICENSE.txt
├── MANIFEST.in
├── README.rst
└── setup.py
```

Packaging

```
pip install ciw
```

```
.
├── ciw
│   ├── __init__.py
│   ├── arrival_node.py
│   ├── data_record.py
│   ├── exit_node.py
│   ├── import_params.py
│   ├── individual.py
│   ├── node.py
│   ├── server.py
│   ├── simulation.py
│   └── tests
│       ├── __init__.py
│       ├── datafortesting
│       │   └── ...
│       └── ...
├── docs
│   ├── _static
│   │   ├── logo.pdf
│   │   ├── favicon.ico
│   │   └── logo.png
│   └── ...
├── scripts
│   └── run_simulation
├── requirements.txt
├── LICENSE.txt
├── MANIFEST.in
├── README.rst
└── setup.py
```

Documentation

SPHINX

Python Documentation Generator

Read the Docs

Academic Uses

Theoretical Work

Investigating deadlock in queueing networks.
(Geraint Palmer, Prof. Paul Harper, Dr. Vincent Knight)

Practical Work

Modelling an ophthalmology clinic to strategise scheduling.
(Lieke Hölscher, Dr. Jennifer Morgan)

Investigating Deadlock

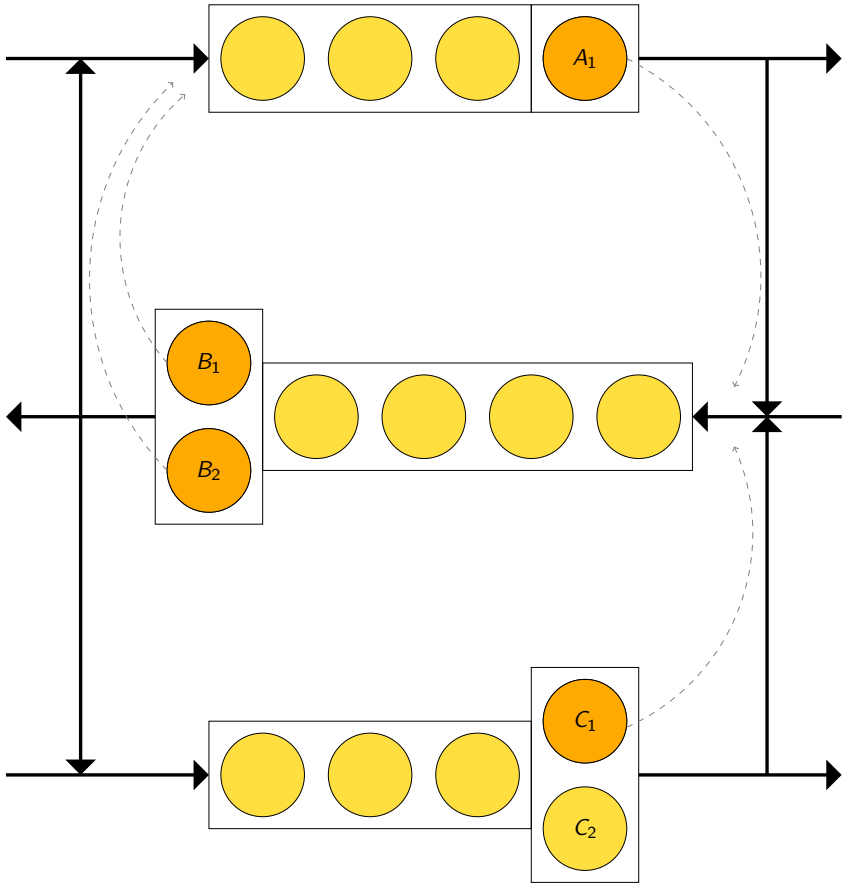

Investigating Deadlock

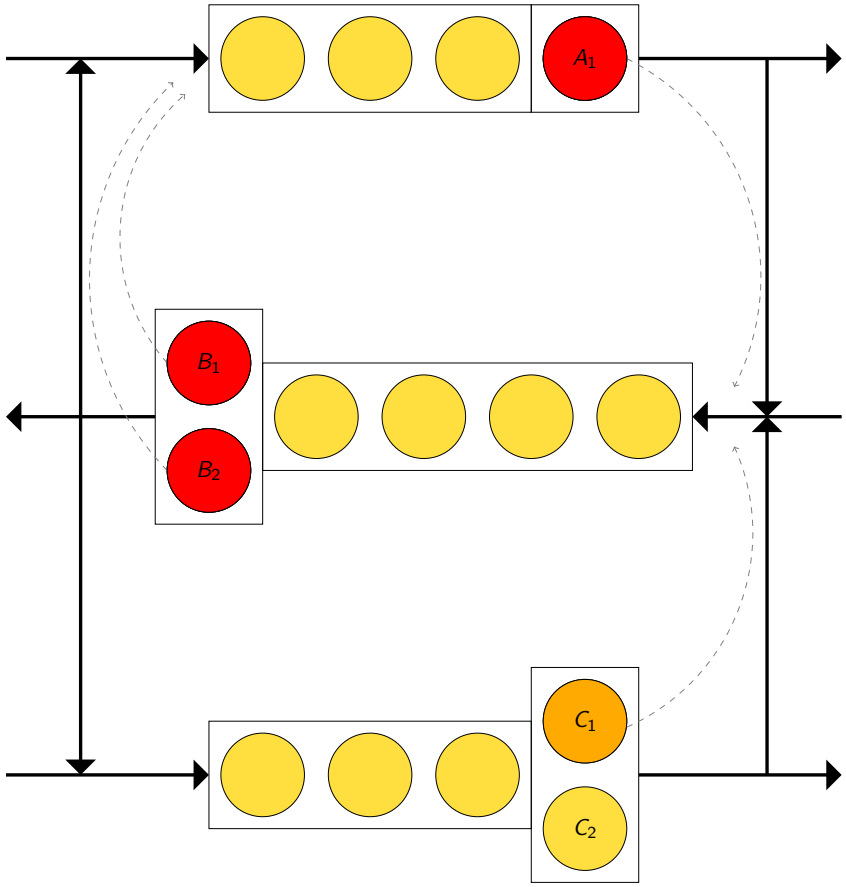

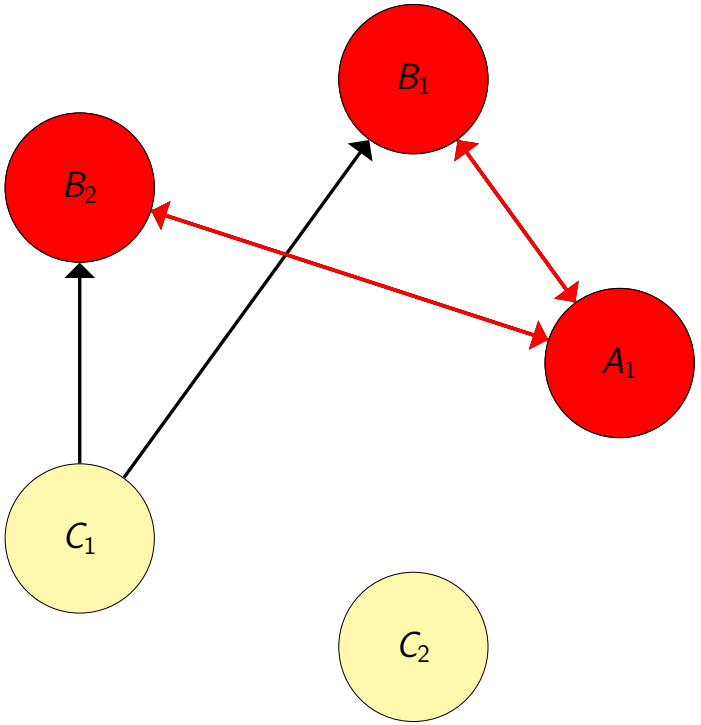

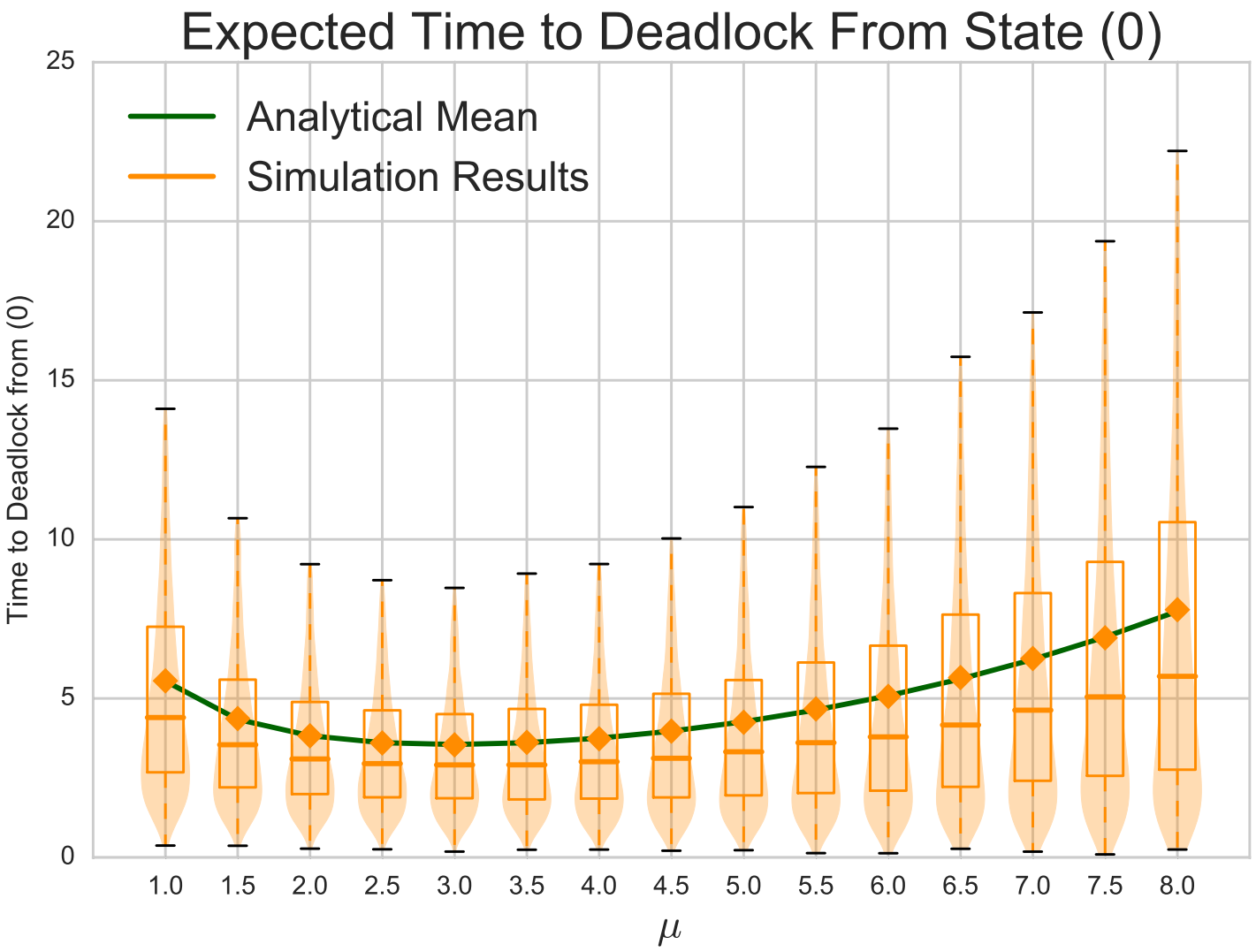
Expected Time to Deadlock From State (0)
Analytical Mean
Simulation Results
Time to Deadlock from (0)
0
5
10
15
20
25
1.0
1.5
2.0
2.5
3.0
3.5
4.0
4.5
5.0
5.5
6.0
6.5
7.0
7.5
8.0
μ

Modelling Ophthalmology Clinic

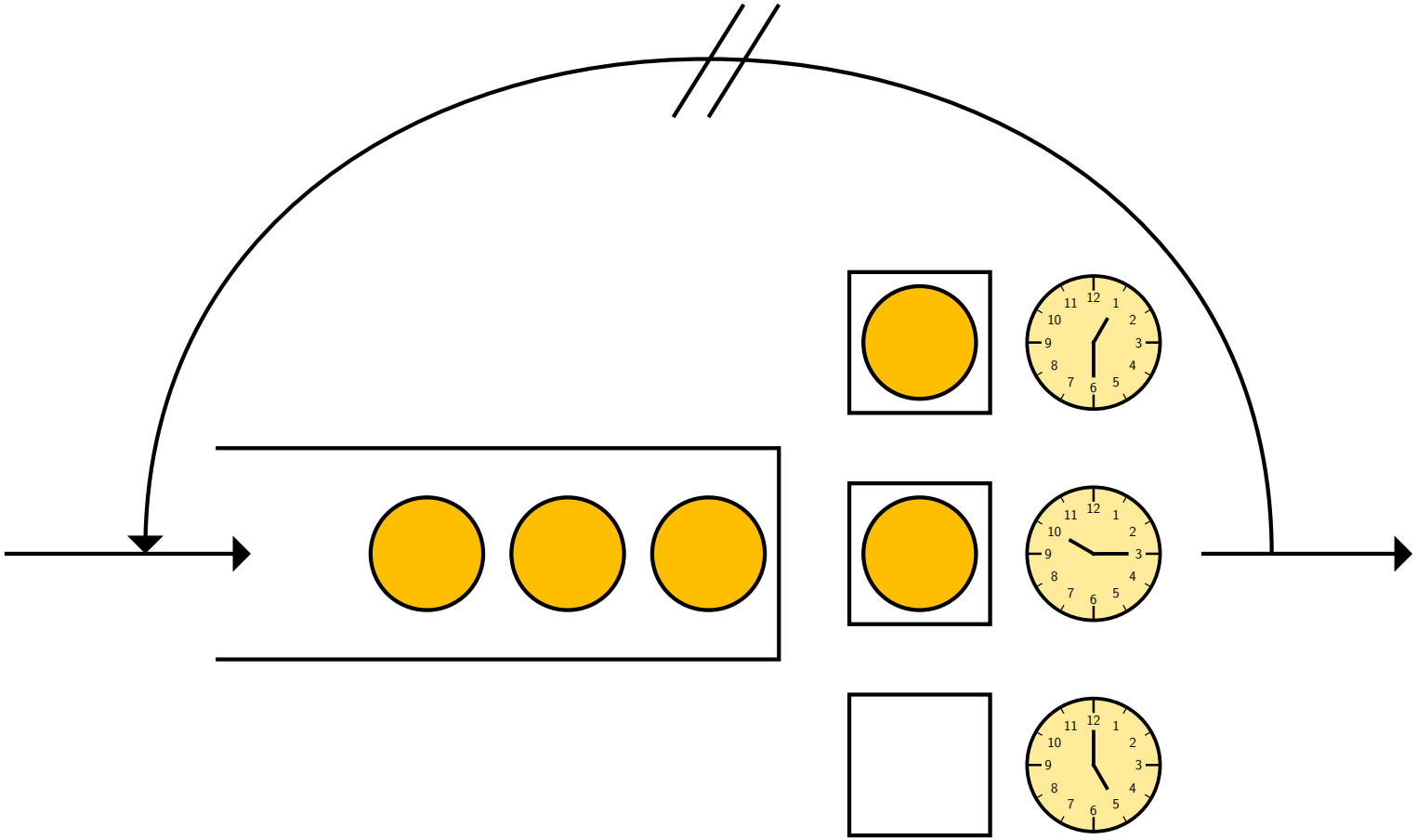

Thank You!

palmergi1@cardiff.ac.uk

geraintianpalmer.org.uk

github.com/geraintpalmer/Ciw

ciw.readthedocs.org

PyYAML

NetworkX

Docopt

Coverage

TravisCI

Sphinx

ReadTheDocs