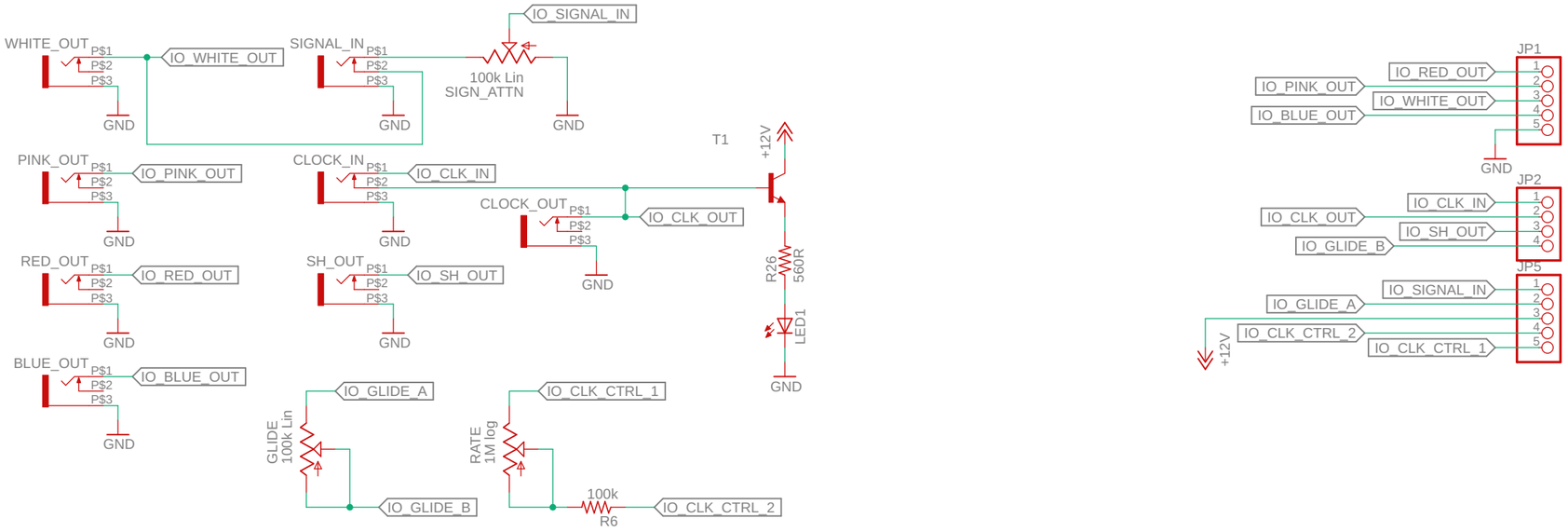

ioboard

06-08-2021 15:14

Sheet: 1/1