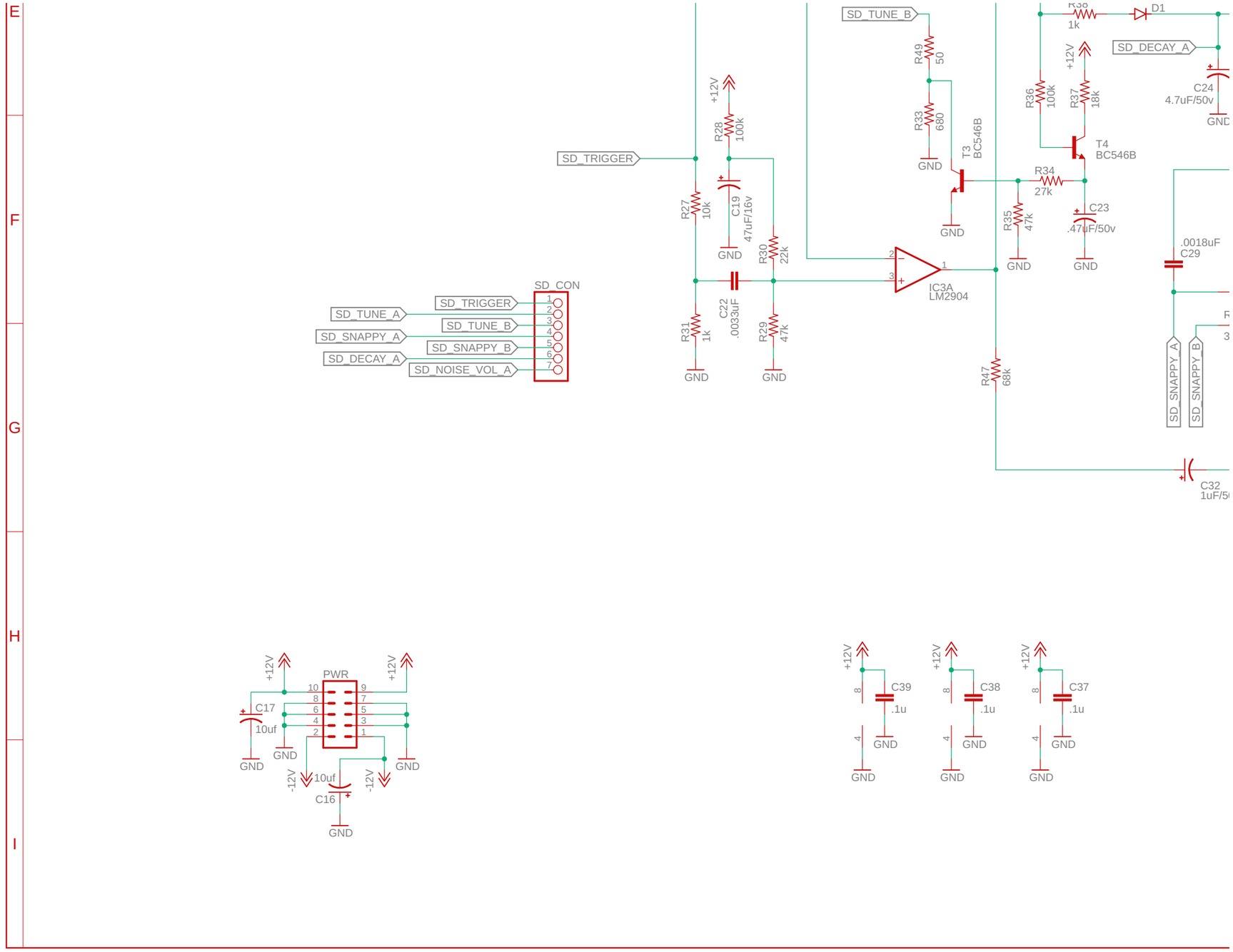
SD_TUNE_B
R49
50
R33
680
GND
T3
BC546B
R36
100k
R37
18k
+12V
T4
BC546B
R34
27k
R35
47k
C23
.47uF/50v
GND
R38
1k
D1
SD_DECAY_A
C24
4.7uF/50v
SD_TRIGGER
R28
100k
C19
47uF/16v
R27
10k
R30
22k
C22
.0033uF
R31
1k
R29
47k
IC3A
LM2904
R47
68k
.0018uF
C29
SD_SNAPPY_A
SD_SNAPPY_B
C32
1uF/5
SD_CON
SD_TUNE_A
SD_SNAPPY_A
SD_DECAY_A
SD_NOISE_VOL_A
PWR
C17
10uf
-12V
C16
C39
.1u
C38
C37

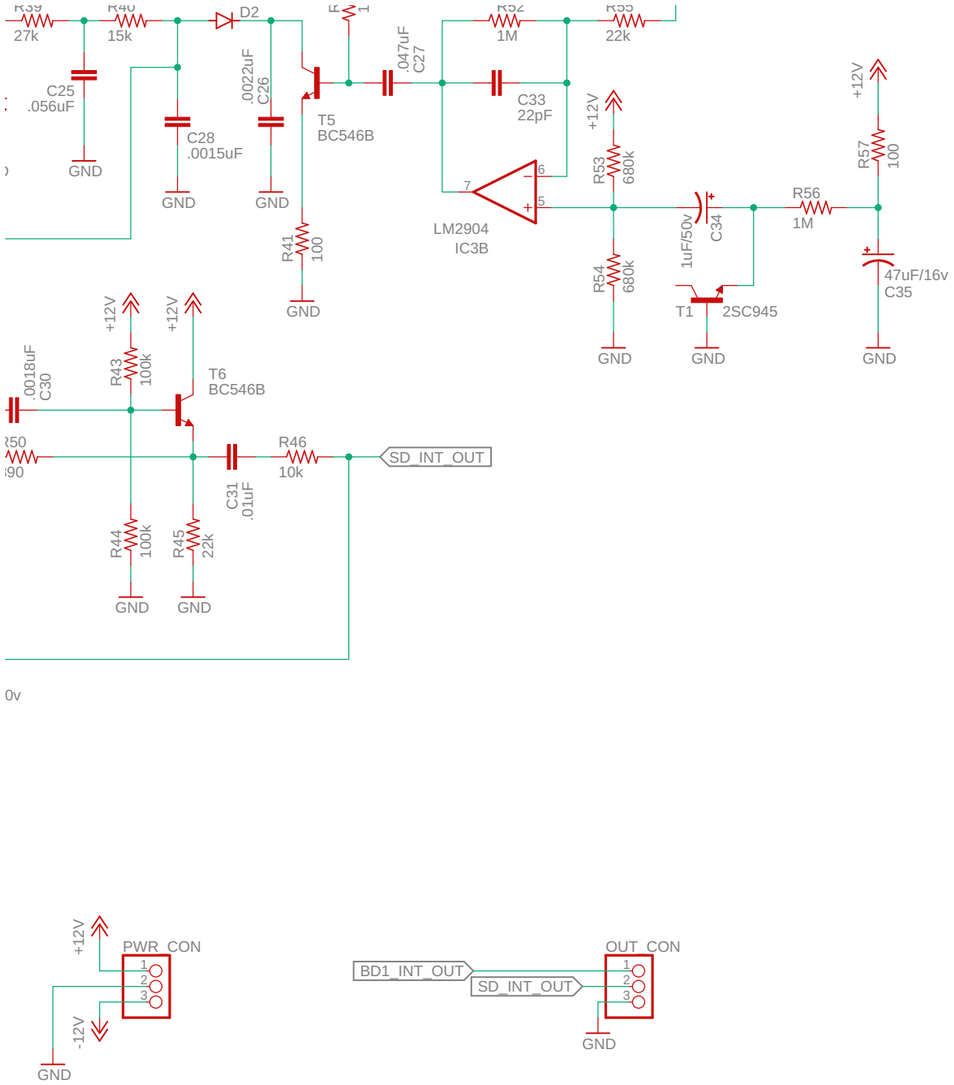

TITLE: mainboard	
Document Number:	REV:
Date: 01-06-2022 13:00	Sheet: 1/1

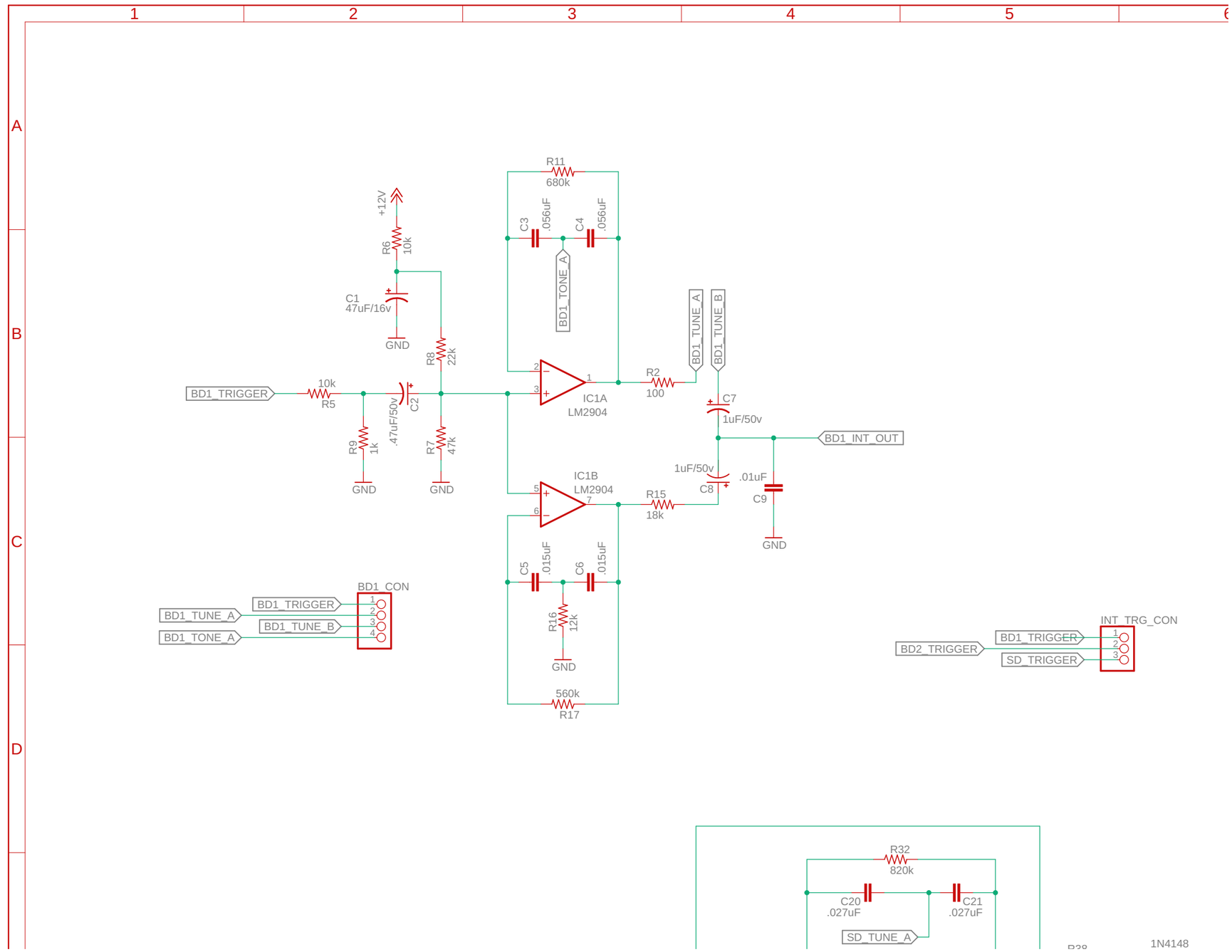
1
2
3
4
5
6
A
B
C
D
+12V
R6
10k
C1
47uF/16v
GND
R8
22k
BD1_TRIGGER
10k
R5
.47uF/50v
C2
R9
1k
R7
47k
R11
680k
C3
.056uF
C4
.056uF
BD1_TONE_A
IC1A
LM2904
R2
100
BD1_TUNE_A
BD1_TUNE_B
C7
1uF/50v
BD1_INT_OUT
1uF/50v
C8
.01uF
C9
IC1B
LM2904
R15
18k
C5
.015uF
C6
.015uF
R16
12k
560k
R17
BD1_CON
BD1_TRIGGER
BD1_TUNE_A
BD1_TUNE_B
BD1_TONE_A
INT_TRG_CON
BD2_TRIGGER
BD1_TRIGGER
SD_TRIGGER
R32
820k
C20
.027uF
C21
.027uF
SD_TUNE_A
1N4148

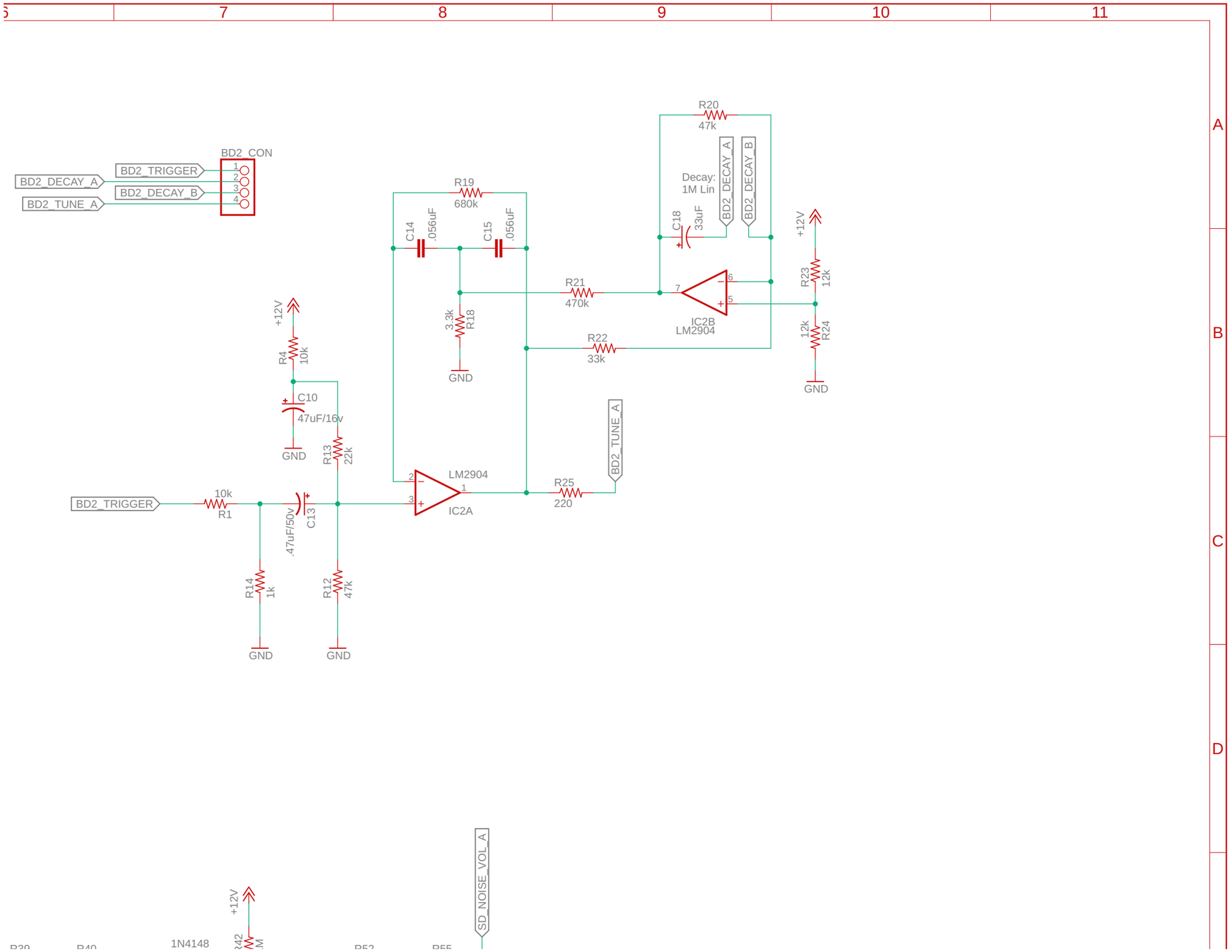
BD2_CON
BD2_TRIGGER
BD2_DECAY_A
BD2_DECAY_B
BD2_TUNE_A
R20
47k
Decay:
1M Lin
C18
33uF
R19
680k
C14
.056uF
C15
.056uF
R21
470k
R22
33k
IC2B
LM2904
R23
12k
R24
12k
+12V
GND
R4
10k
C10
47uF/16v
R13
22k
LM2904
IC2A
R25
220
R1
10k
.47uF/50v
C13
R14
1k
R12
47k
SD_NOISE_VOL_A
1N4148